CITY OF STOUGHTON
DEPARTMENT OF
PLANNING & DEVELOPMENT
381 East Main Street, Stoughton, WI. 53589

(608) 873-6619 www.ci.stoughton.wi.us

RODNEY J. SCHEEL
DIRECTOR

Date: October 31, 2019

To: Plan Commissioners

From: Rodney J. Scheel
Director of Planning & Development

Michael P. Stacey
Zoning Administrator/Assistant Planner

Subject: Agenda Item for the November 11, 2019 Plan Commission Meeting

Request by Exclusively Roses, Inc. for site plan approval to construct a new building at 421 Glacier Moraine Drive.

This request is to construct a new building to allow the Exclusively Roses operation to relocate to this new facility. Exclusively Roses is experiencing rapid growth and is in need of a larger facility. Any approval will be contingent on the sale of the City owned property to the applicant and future certified survey map approval to split the property. Glacier Moraine Drive is expected to be finished early next year so initial access to the property will be from Progress Lane. The resolution, site information, and staff review letter are provided. Plan Commission approval is necessary.

CITY OF STOUGHTON, 381 E. MAIN STREET, STOUGHTON, WISCONSIN

RESOLUTION OF THE PLAN COMMISSION

Approving a site plan to construct a new commercial building at 421 Glacier Moraine Drive, Stoughton, WI.

Committee Action: Plan Commission approves the request – 0

Fiscal Impact:

File Number:	R - 16 - 2019	**Date Introduced:**	November 11, 2019

RECITALS

A. Exclusively Roses (the "Applicant") is seeking site plan approval to construct a new commercial building at 421 Glacier Moraine Drive, in the City of Stoughton, Dane County, Wisconsin (the "Property").

B. The Property is zoned Planned Industrial and the proposed site plan is subject to Plan Commission approval.

C. The City Plan Commission reviewed and discussed the proposed site improvements at their regular November 11, 2019 meeting and found that the site improvements meet the intent of the zoning ordinance and Comprehensive Plan.

RESOLUTION

BE IT RESOLVED, the City of Stoughton Plan Commission approves the site plan to construct a new commercial building at 421 Glacier Moraine Drive, Stoughton, WI, with the following conditions:

- Staff review letter dated 11/5/19;

_____

Mayor Tim Swadley Date
Planning Commission Chair

Google Maps Williams Dr

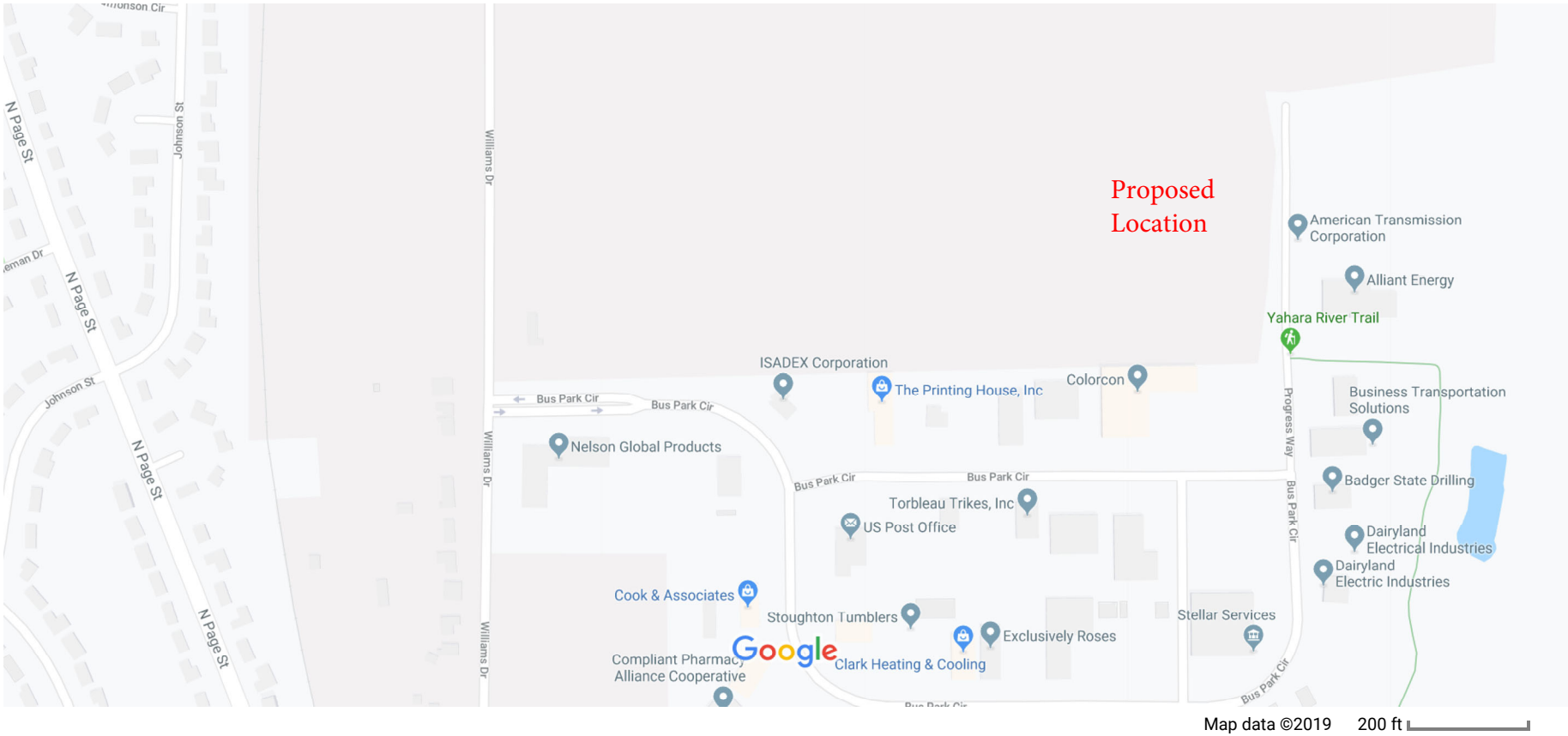

Exclusively Roses, Inc.
221 Business Park Circle
Stoughton, WI 53589

Re: 421 Glacier Moraine Drive **October, 2019**

To whom it may concern,

The address of 421 Glacier Moraine Drive will be used for light industrial use. Exclusively Roses Inc. will be manufacturing flower bouquets for retail sale. The components of the bouquets include flowers, plush toys, flower picks, and glass vases. The flowers are permissible so are not stored for longer than one week and then our next delivery of raw product arrives. We do store extra plush toys, flower picks, and glass vases at times. We use limited equipment including a bucket washer, rose cutter, and dishwasher for the glass vases. All of production occurs within the building and there is not odor, heat, vibration, or radiation associated with the work being done. We will also not have any outdoor storage, other than the trash storage area. This exterior enclosure will be constructed of the same material as the steel building. The highest expected number of employees per shift will be 60, however the average will be 30.

Bradford Anderson

Vice President, Exclusively Roses, Inc.

608-877-8879

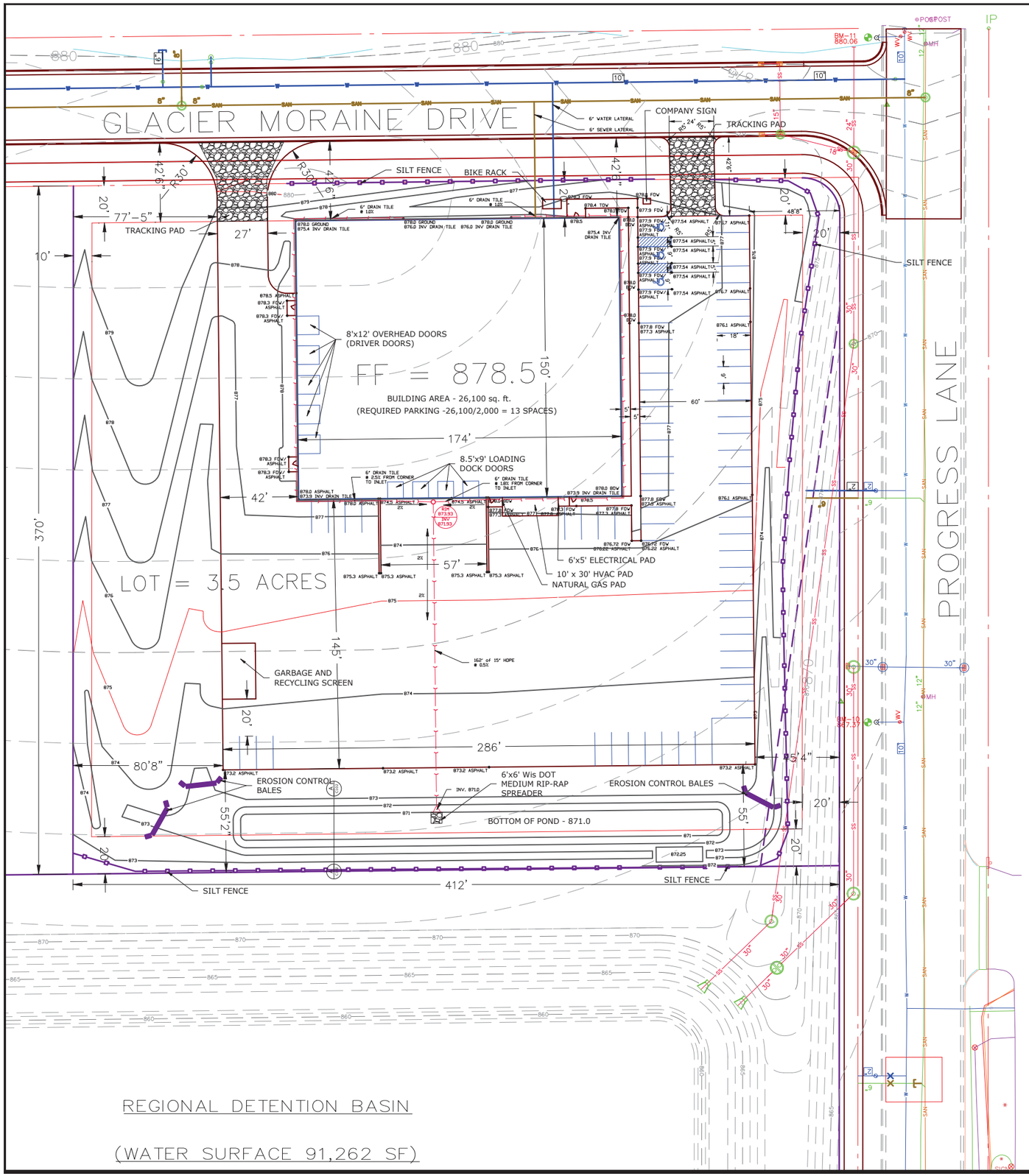

LEGEND

- EXISTING CURB AND GUTTER
- EXISTING CONCRETE FLATWORK
- EXISTING BUILDING LINE
- EXISTING TREE
- EXISTING BENCHMARK ELEVATION
- EXISTING UTILITY POLE AND LINES
- EXISTING STORM INLET
- EXISTING MANHOLE
- EXISTING WATER VALVE
- EXISTING WATER MAIN REDUCER
- EXISTING FIRE HYDRANT
- EXISTING WATER MAIN TEE
- EXISTING WATER MAIN CROSS
- EXISTING WATER MAIN AND SIZE
- EXISTING SANITARY SEWER AND SIZE
- EXISTING STORM SEWER AND SIZE
- EXISTING GAS MAIN
- EXISTING TELEPHONE
- EXISTING UNDERGROUND ELECTRIC
- EXISTING FORCE MAIN AND SIZE
- EXISTING TV CABLE
- EXISTING UNDERGROUND FIBER OPTIC
- EXISTING TELEPHONE PEDESTAL
- EXISTING ELECTRIC PEDESTAL
- EXISTING CABLE PEDESTAL
- EXISTING FENCELINE
- PROPOSED CURB AND GUTTER
- PROPOSED CONCRETE FLATWORK
- PROPOSED BUILDING LINE
- PROPOSED TREE
- PROPOSED BENCHMARK ELEVATION
- PROPOSED UTILITY POLE AND LINES
- PROPOSED STORM INLET
- PROPOSED MANHOLE
- PROPOSED WATER VALVE
- PROPOSED WATER MAIN REDUCER
- PROPOSED FIRE HYDRANT
- PROPOSED WATER MAIN TEE
- PROPOSED WATER MAIN CROSS
- PROPOSED WATER MAIN
- PROPOSED SANITARY SEWER
- PROPOSED STORM SEWER
- PROPOSED GAS MAIN
- PROPOSED TELEPHONE
- PROPOSED UNDERGROUND ELECTRIC
- PROPOSED FORCE MAIN
- FOUND 3/4" OR SMALLER REBAR/SOLID ROD
- FOUND 1 1/4" REBAR OR SOLID ROD
- FOUND 1" PIPE
- FOUND 1 1/2" - 2" PIPE
- SET 3/4" REBAR
- SET 1 1/4" REBAR
- EXISTING PROPERTY LINES
- PROPOSED PROPERTY LINES
- PROPOSED EASEMENT LINES
- BUILDING SET BACK LINES

LOT AREA - 152,460 SQ. FT. OR 3.5 ACRES
FLOOR AREA - 26,100 SQ. FT. OR .60 ACRES
FLOOR AREA RATIO - 17.1%
IMPERVIOUS SURFACE AREA - 83,356 SQ. FT. OR 1.91 ACRES
IMPERVIOUS SURFACE RATIO - 54.6%
BUILDING HEIGHT - 19' 1 1/2" AT PEAK OF ROOF, 16' AT EAVES

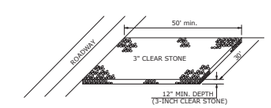

TRACKING PAD
NOT TO SCALE

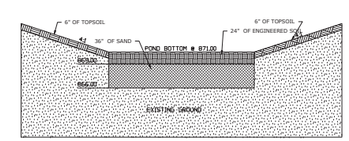

NOTES:
1.SAND TO BE A TYPICAL COARSE SAND WITH AN INFILTRATION RATE OF 3.6"/HR MIN.
2.ENGINEERED SOIL TO BE A LOAMY SAND WITH AN INFILTRATION RATE OF 1.63"/HR MIN.

A BIORETENTION BASIN SECTION
C-503 NOT TO SCALE

NORTH
30 0 30
SCALES:
22x34 sheets - 1" = 30'
11x17 sheets - 1" = 60'

EROSION CONTROL NOTES:

1. CONTRACTOR SHALL HAVE ALL EROSION CONTROL MEASURES IN PLACE AND APPROVED BY THE ENGINEER PRIOR TO COMMENCEMENT OF EXCAVATION AND ACTIVITIES.
2. EROSION CONTROL MEASURES SHALL COMPLY WITH WISCONSIN ADMINISTRATIVE CODE, COMM CHAPTER 21, UNIFORM DWELLING CODE, AND CHAPTER 65 COMMERCIAL CONSTRUCTION.
3. ALL SILT FENCES SHALL BE INSPECTED DAILY. CLEANING, ADJUSTING AND REPLACING EROSION CONTROL MEAUSRES SHALL BE DONE AS NECESSARY THROUGHOUT CONSTRUCTION. ALL EROSION CONTROL MEASURES SHALL BE IN WORKING CONDITION AT THE END OF EACH WORK DAY.
4. EROSION CONTROL MEASURES SHALL BE INSTALLED PER THE DETAILS IN LOCATIONS DESIGNATED ON THE PLANS, OR AS MAY OTHERWISE BY DIRECTED BY THE ENGINEER.
5. SEDIMENT FROM OVERLAND FLOW SHALL BE PREVENTED FROM LEAVING THE WORK SITE BY INSTALLING SILT FENCING PARALLEL TO THE CONTOURS LOCATED DOWNHILL OF THE WORK SITE.
6. EXISTING VEGETATION SHALL BE REMOVED ONLY TO THE EXTENT NECESSARY TO PERFORM CONSTRUCTION ACTIVITIES. CLEARING OF AREAS THAT ARE CLEARLY OUTSIDE THE LIMITS OF CONSTRUCTION SHALL NOT BE PERMITTED.
7. ALL DISTURBED AREAS SHALL BE RESTORED AND VEGETATED AS SOON AS POSSIBLE AFTER DISTURBANCE. IN GENERAL, STABILIZATION OF DISTURBED AREAS SHALL BE COMPLETED WITHIN 30 DAYS OF THE INITIAL DISTURBANCE, OR WITHIN 7 DAYS OF FINAL GRADING AND TOPSOIL PLACEMENT.
8. REFER TO THE DNR TECHNICAL STANDARDS AVAILABLE AT HTTP://WWW.DNR.STATE.WI.US/ORG/WATER/WM/NPS/STORMWATER/TECHSTDS.HTM.
9. CONTRACTOR SHALL WATER NEWLY SEEDED AREAS IF 7 DAYS PASS WITHOUT A RAINFALL DURING THE FIRST 6 WEEKS AFTER INITITAL STABILIZATION.
10. MULCHING OF DISTURBED AREAS SHALL BE AT A RATE OF 2 TONS PER ACRE. MULCH SHALL BE ANCHORED INTO THE SOIL BY DISCING.
11. AFTER ATTEMPTS TO STABILIZE DISTURBED AREAS WITH SEEDING AND MULCH FAIL, THOSE AREAS SHALL BE TEMPORARILY STABILIZED USING POLYACRYLAMIDE UNDER DIRECTION OF THE ENGINEER.
12. A MINIMUM OF ONE EROSION CONTROL INSPECTION SHALL BE PERFORMED EACH WEEK, AND ONE INSPECTION SHALL BE PERFORMED AFTER ANY RAINFALL EVENT OF 0.5" OR GREATER. ALL REPAIRS OR MODIFICATIONS SHALL BE COMPLETED WITHIN 24 HOURS OF THE INSPECTION.

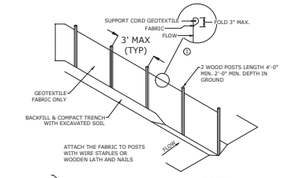

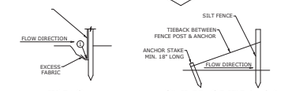

TRENCH — SILT FENCE TIE BACK (WHEN REQUIRED BY ENGINEER)

NOTE:
8' SPACING ALLOWED IF A WOVEN GEOTEXTILE FABRIC IS USED

GENERAL NOTES

1. TRENCH SHALL BE A MINIMUM OF 4" WIDE & 6" DEEP TO BURY AND ANCHOR THE GEOTEXTILE FABRIC. FOLD MATERIAL TO FIT TRENCH AND BACKFILL & COMPACT TRENCH WITH EXCAVATED SOIL
2. WOOD POSTS SHALL BE A MINIMUM SIZE OF 1-1/8"x1-1/8" OF OAK OR HICKORY

SILT FENCE DETAIL

NOTE:
ADDITIONAL POST DEPTH OR TIE BACKS MAY BE REQUIRED IN UNSTABLE SOILS AT LOCATIONS AS DIRECTED BY ENGINEER

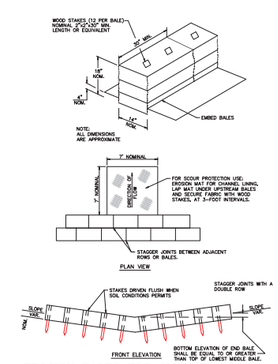

EROSION BALES FOR CHANNEL FLOW

REVISIONS
9/20/2019
10/10/2019
10/29/2019

Exclusively Roses
Stoughton Business Park
421 Glacier Moraine Drive Stoughton, WI
Site Plan

ENGINEERING
SURVEYING
ENVIRONMENTAL
(608) 935-3310
ENGINEERING CONSULTANTS, INC.
2800 C.T.H. Y - DODGEVILLE, WI 53533

DATE: 8/21/19
DESIGNED:
DRAFTED:
PROJECT #: 19-067

C 101

Plotted: 2019-10-29 12:50:36 Filename - z:\eagle point projects\stoughton\exclusively roses\site plan with new grading.dwg

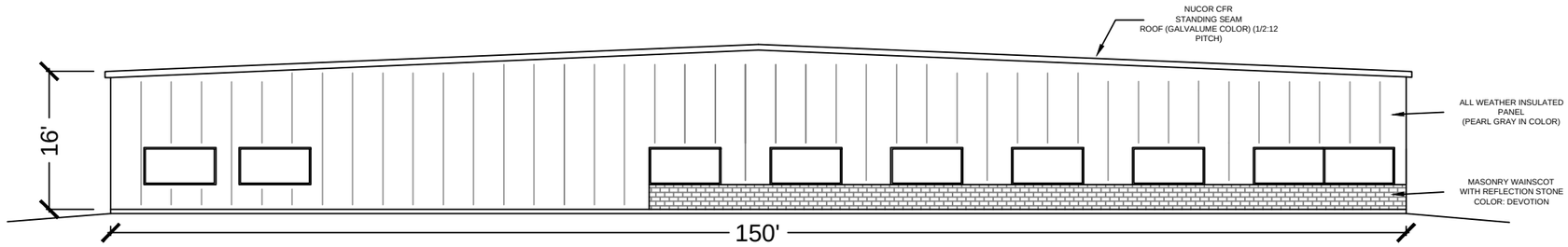

EAST ELEVATION
1/16"=1'

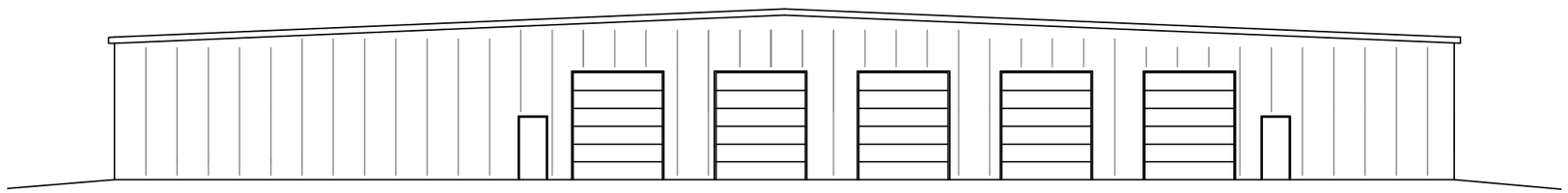

WEST ELEVATION
1/16"=1'

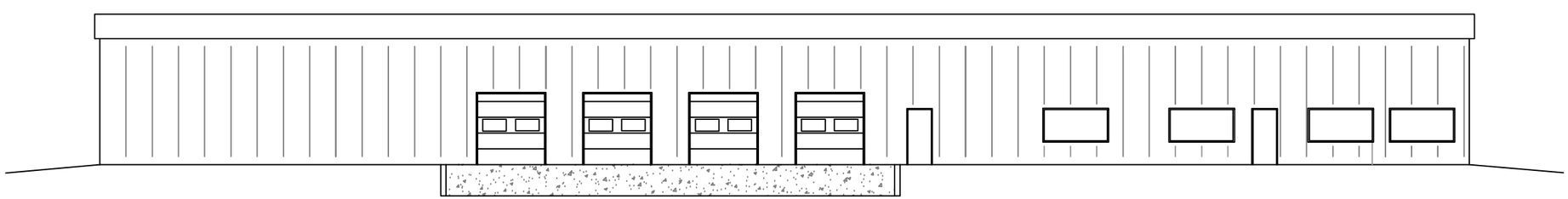

SOUTH ELEVATION
1/16"=1'

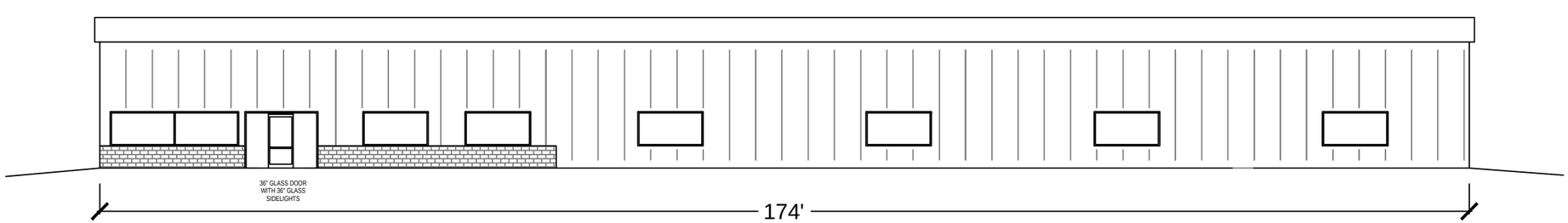

NORTH ELEVATION
1/16"=1'

2342 HWY AB
McFARLAND
WIS. 53558
(608)838-8213
DAVIS STEEL BUILDINGS, INC.

JOB NO.

DATE
10/10/19

SCALE
AS SHOWN

DR. BY:
JAD

ELEVATIONS

EXCLUSIVELY ROSES

STOUGHTON, WI

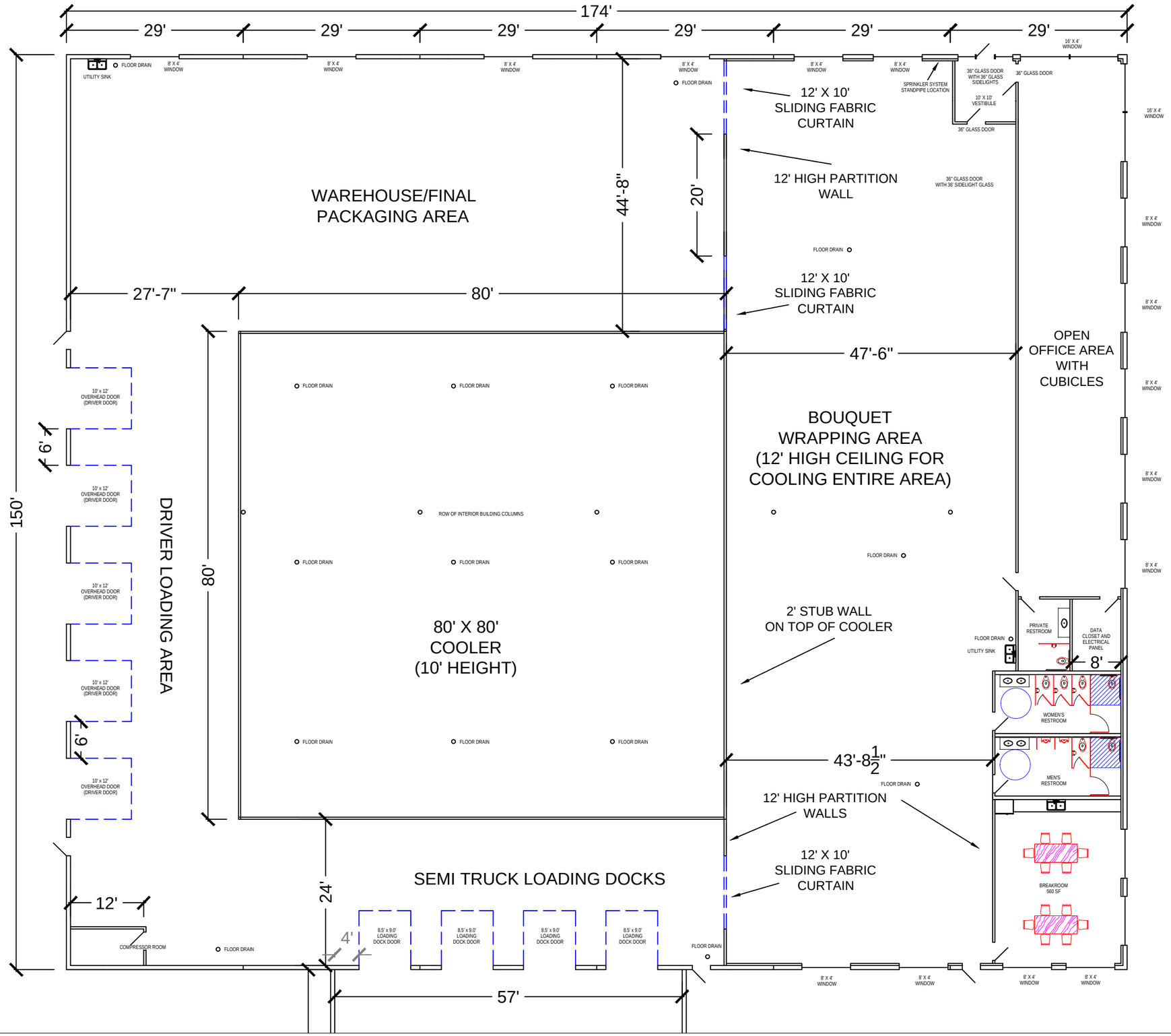

FLOOR PLAN
1/8"=1' (22" x 34")
1/16=1' (11" x 17")

DAVIS STEEL BUILDINGS, INC.
2342 HWY AB
McFARLAND
WIS. 53558
(608)838-6213

JOB NO.
DATE 10/10/19
SCALE AS SHOWN
DR. BY: JAD

FLOOR PLAN
EXCLUSIVELY ROSES
STOUGHTON, WI

	Exclusively Roses, Stoughton WI		**Planned Industrial zoning**		
	Point count and Landscape Calculation Equation				
	Areas	**Sq. ft**	**formula (round up to whole number**	**points**	
	Paved area	66 pkg stalls	66/20=4x60	240	
	Street Frontage (2 streets)	834 LF	834/100x40	334	
	Building perimeter	684 LF	684/100x40+1	274	
	Building floor area (footprint)	29595 SF	26100/1000=26x10=260	296	
				1144	needed
min.					
size	**area**	**number**	**points each**	**total points**	
	Street frontage			**344**	**points needed**
18"w/t	Densiformis yew	38	5	190	
36" t	Viburnum, Blue Muffin	3	5	15	
4' t	Crab, Spring Snow	3	10	30	
18" t	Spirea, Neon Flash	17	1	17	
12" t/w	Juniper, Daubs Frosted	3	1	3	
5' t	White Pine	2	40	80	
				335	actual total
	Parking (inc. parking islands)			**240**	**points needed**
1.5" cal	Locust, Skyline	2	30	60	
12" t/w	Juniper, Daubs Frosted	11	1	11	
24" t	Lilac, Miss Kim	6	5	30	
1.5" cal	Rubrum maple	5	30	150	
				251	actual total
	Building perimeter and Building footprint			**274 + 296**	**points needed**
2" cal	Sugar maple	5	75	375	
1.5" cal	Redmond linden	2	30	60	
5' t	Black Hills spruce	4	40	160	
				595	actual total
				11.81	Actual total

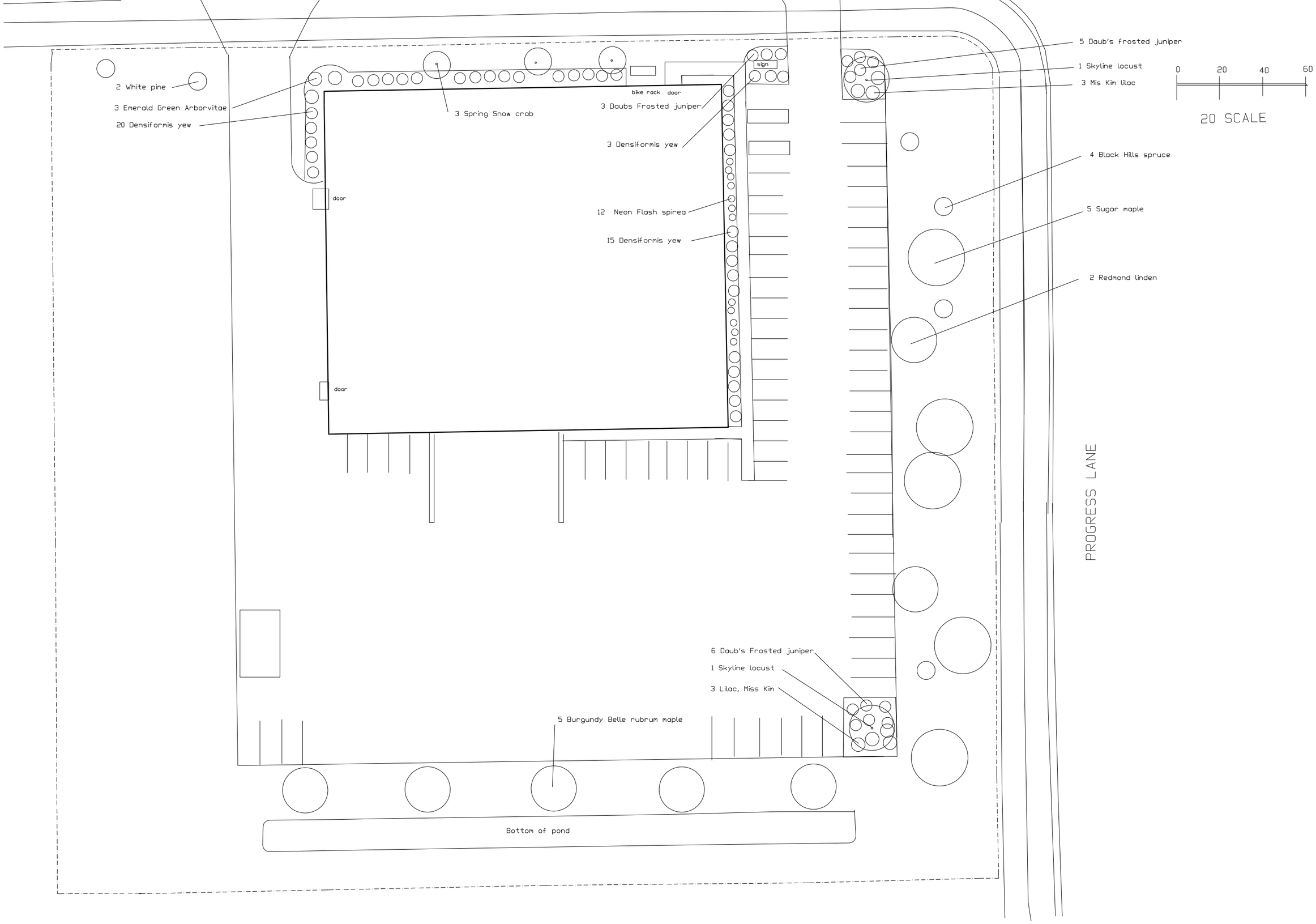

Exclusicvely Roses
Stoughton Business Park
121 Flagship Drive Stoughton

North River Landscape,
Design and consulting
Palmetto, FL

INNOVATIVE. ADAPTABLE. ENERGY EFFICIENT.

INSULATED METAL PANELS

NUCOR
BUILDING SYSTEMS

INSULATED METAL PANELS

NUCOR
BUILDING SYSTEMS

Leading the industry in technology, design flexibility, quality, and value, Nucor Building Systems is one of the largest and most experienced manufacturers of custom engineered steel building systems. In addition to offering a full line of custom products, our insulated panels rank as one of the most energy-efficient, well-made, cost-effective building solutions on the market today.

Innovative • Adaptable • Energy Efficient

NBS insulated metal panels embody attractive styling and cutting edge energy efficiency. Designed with the latest scientific breakthroughs, our panels are lightweight, durable and still maintain their ease of installation and visual appeal. Now is the best time to build with NBS insulated metal panels because the benefits have never been greater.

Attractive & Lightweight

One of the most sophisticated building products on the market today, insulated panels offer a clean, consistent and high-quality appearance that immediately adds value to any building. Insulated panels enhance the visual appearance of your buildings, and their remarkable light weight reduces structural requirements and installation costs.

Sturdy & Durable

The panels incorporate a finished interior liner, factory applied air and vapor shield, and insulated foam core finished exterior weathering surface into a single cladding unit. The composite action resulting from a chemical bond between the injected-in-place foam core and steel skins creates a lightweight, rigid unit with exceptional spanning capacity.

Easy to Install & Affordable

Lightweight and simplified fastening systems deliver quick installation and reduce labor costs. The panels themselves are very affordable, in part because of their lowered shipping costs attributed to their light weight. Panels can even be installed in adverse weather conditions.

Superior Thermal Performance

You get 100% reliable thermal performance and insulation continuity – no cavities, no gaps, no crushed insulation and no thermal bridges. No change of R-value occurs when purlin and girt center dimensions are varied. The insulated core is the most thermally effective insulant commonly available today. Insulation values can be easily increased by simply increasing the thickness of the panels.

Insulated Wall Panels

Double Mesa Profile (DM40)

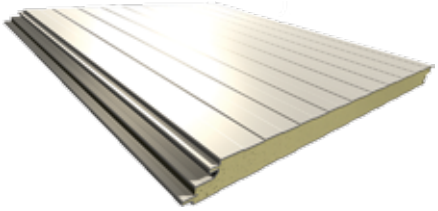

Striated Profile (ST40)

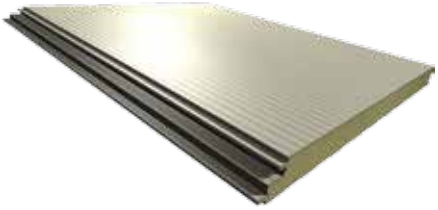

Heavy Embossed Profile (HE40)

Insulated Roof Panels

Standing Seam Roof Profile (SR2)

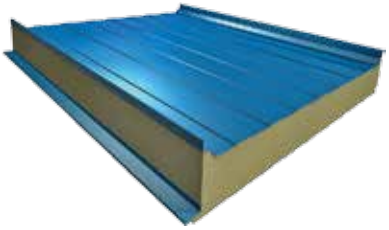

High Rib Roof Profile (HR3)

INSULATED WALL PANELS

Each project follows a different set of parameters and as such, may require a different set of wall panels. We offer a selection of panels to accommodate the needs of any project. Each of our three wall panel profiles detailed below is ideally suited for commercial and industrial applications. The 40" wide panels install quickly and easily. Fasteners are concealed within the panel side joint, and the attractive profiles break up the flat expanse of metal on large projects such as manufacturing plants or warehouses. Trim for all three panel types is smooth as a standard.

DOUBLE MESA PROFILE (DM40)

Exterior Texture: Light Embossed | Interior Texture: Light Embossed

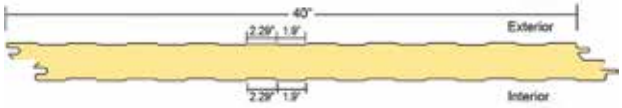

STRIATED PROFILE (ST40)

Exterior Texture: Light Embossed | Interior Texture: Light Embossed

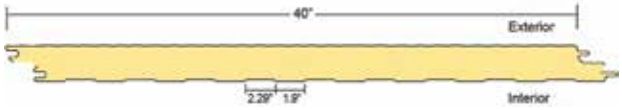

HEAVY EMBOSSED PROFILE (HE40)

Exterior Texture: Heavy Embossed | Interior Texture: Light Embossed

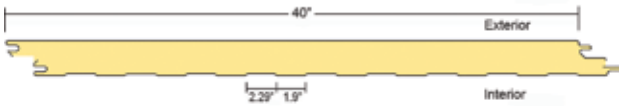

Features and Benefits

- The double tongue & groove is self-aligning and weathertight. This allows for sealant application at either the interior or exterior side of the panel joinery, depending on the direction of the vapor drive.
- Hidden/concealed fasteners give the panel a clean and aesthetically appealing appearance.
- Removable film prevents damage to the exterior of the panel during shipping and installation.
- Panels arrive on-site in one piece, requiring a simple one-step installation, reducing construction time and costs.
- Standard exterior and interior steel surface is 26 gauge, with 24ga and 22ga optional for some profiles.
- Panels are available in 2", 2.5", 3", and 4" thickness, 5" & 6" are available as special order. Lengths can range from 8'-0" to 50'-0", depending on solar loading.

Wall Systems Specifications

Double Mesa, Striated & Heavy Embossed Profiles

Thickness	2"	2.5"	3"	4"
R-Values*	R16	R20	R24	R32
U-Factors	U0.063	U0.049	U0.041	U0.031
Width	40"			
Length	8'0" minimum to 50'0" maximum, depending on solar loading			
Coatings	Exterior: PVDF Interior: Imperial White (polyester)			
Interior Texture	Light Embossed			
Insulation	CFC-free foamed-in-place Polyisocyanurate foam @ 2.2 to 2.5 pcf density			
Metal Facings	Exterior: 26 ga galvanized steel 24 & 22 ga are optional for some profiles Interior: 26 ga galvanized steel 24 & 22 ga are optional for some profiles			
Joint Configuration	Off-set tongue & groove with concealed fastener			

* R-values are derived from thermal testing per ASTM C518 @ 40ºF mean and ASTM C1363 @ 35ºF mean. For project specific values, please contact your sales representative.

Structural Load Table

Allowable load for all wall panels (PSF) is based on L/180 deflection

Thickness	Weight	Simple Span								Two or More Spans							
Inches	PSF	5'	6'	7'	8'	9'	10'	11'	12'	5'	6'	7'	8'	9'	10'	11'	12'
2"	2.22	65	49	38	30	24	19	15	13	70	55	44	36	30	25	21	18
2.5"	2.34	85	65	51	41	33	27	22	18	90	72	58	48	40	34	29	24
3"	2.41	106	82	65	53	43	35	29	25	111	89	72	60	51	43	37	32
4"	2.62	147	116	94	77	64	53	45	38	153	123	101	85	72	62	54	47

Notes: Spans shown are based on a transverse load testing of panels per ASTM E-72. Thermal effect due to temperature differentials have not been considered. Loads shown do not include a check of the attachment to the supports. Attachment requirements will vary based on the project wind load requirements. Loads shown are based on panels with 26 gauge interior and exterior facings.

INSULATED ROOF PANELS

Nucor's SR2 brings the look of a traditional standing seam roof with all the benefits of an insulated metal panel. Field seamed with a hidden fastener, the SR2 offers maximum protection against the elements. Our HR3 is the economical solution to field assembled metal roofing and installs quickly by through fastening at the standing ribs into supporting structural members.

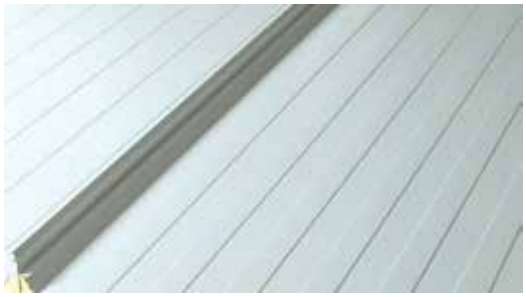

STANDING SEAM (SR2)

Exterior Texture: Smooth | Interior Finish: Light Embossed

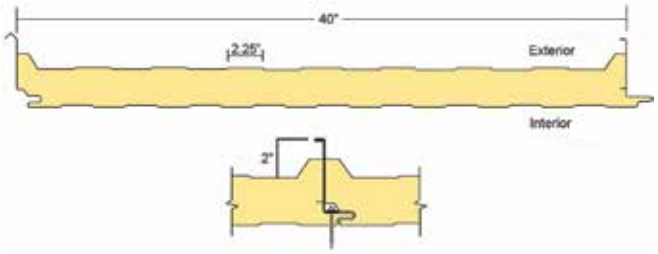

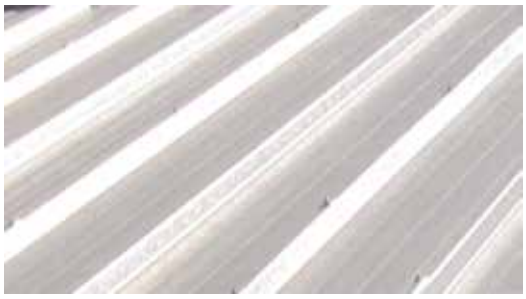

HIGH RIB (HR3)

Exterior Texture: Smooth | Interior Finish: Light Embossed

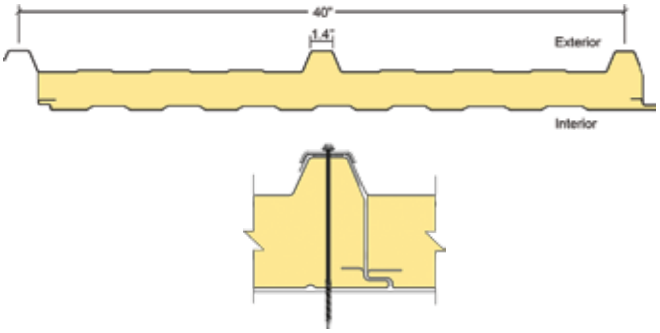

Features and Benefits

- Panels arrive on-site in one piece, requiring a simple one-step installation, reducing construction time and costs.
- The HR3 panels have an overlapping joint that is self-aligning, which allows for easy sealant application at the panel joinery.
- SR2 panels arrive with factory applied sealant on the topside rib of all panels as a standard. Some restrictions will apply.
- High level of thermal R-Value leads to energy cost savings for your facility.
- Standard metal surface is 26 gauge G-90 galvanized steel, with a PVDF coating providing fade-resistant, energy efficient exterior.
- HR3 Roof Panels are available in 2.5", 4", 5", and 6" thickness and install quickly and easily by through fastening at the standing ribs into supporting structural members.
- The SR2 trapezoidal rib design provides added strength against potential foot traffic damage compared to other standing seam products.

Roof Systems Specifications

SR2 Standing Seam and HR3 High Rib

Thickness	2.5" (HR3 only)	3.25" (SR2 only)	4"	5"	6"
R-Value*	R21	R26	R33	R42	R50
U-Factors	.050	.038	.031	.024	.020
Width	40"				
Length	8'0" minimum to 50'0" maximum depending on solar loading				
Coatings	Exterior: PVDF Interior: Imperial White (polyester)				
Interior Texture	Light Embossed				
Insulation	CFC-free foamed-in-place Polyisocyanurate foam @ 2.2 to 2.5 pcf density				
Metal Facings	Exterior: 26 ga galvanized steel (24 & 22 optional) Interior: 26 ga galvanized steel				
Joint Configuration	SR2: Off-set tongue & groove with concealed fastener. 90° field seamed HR3: Overlapping with through fastening at standing rib				
Min. Roof Pitch	SR2: 1/2 : 12 HR3: 1:12				

* R-values are derived from thermal testing per ASTM C518 @ 40°F mean and ASTM C1363 @ 35°F mean. For project specific values, please contact your sales representative.

Structural Load Table

Allowable load for SR2 standing seam and HR3 High Rib roof panels (PSF) is based on L/240 deflection

Thickness	Weight	SR2 Panel Spans						HR3 Panel Spans					
Inches	PSF	4'	4.5'	5'	5.5'	6'	7'	4'	4.5'	5'	5.5'	6'	7'
2.5"	2.33	n/a	n/a	n/a	n/a	n/a	n/a	83	73	65	59	54	45
3.25"	2.48	90	79	70	62	56	46	n/a	n/a	n/a	n/a	n/a	n/a
4"	2.65	112	98	87	78	71	59	116	102	90	81	73	61
5"	2.86	142	125	111	100	90	75	146	128	114	102	93	77
6"	3.12	172	151	135	121	110	92	175	155	138	124	112	94

Notes: Spans shown are based on a transverse load testing of panels per ASTM E-72. Thermal effect due to temperature differentials have not been considered. Loads shown do not include a check of the attachment to the supports. Attachment requirements will vary based on the project wind load requirements. Loads shown are based on panels with 26 gauge interior and exterior facings.

INSULATED METAL PANEL ADVANTAGES

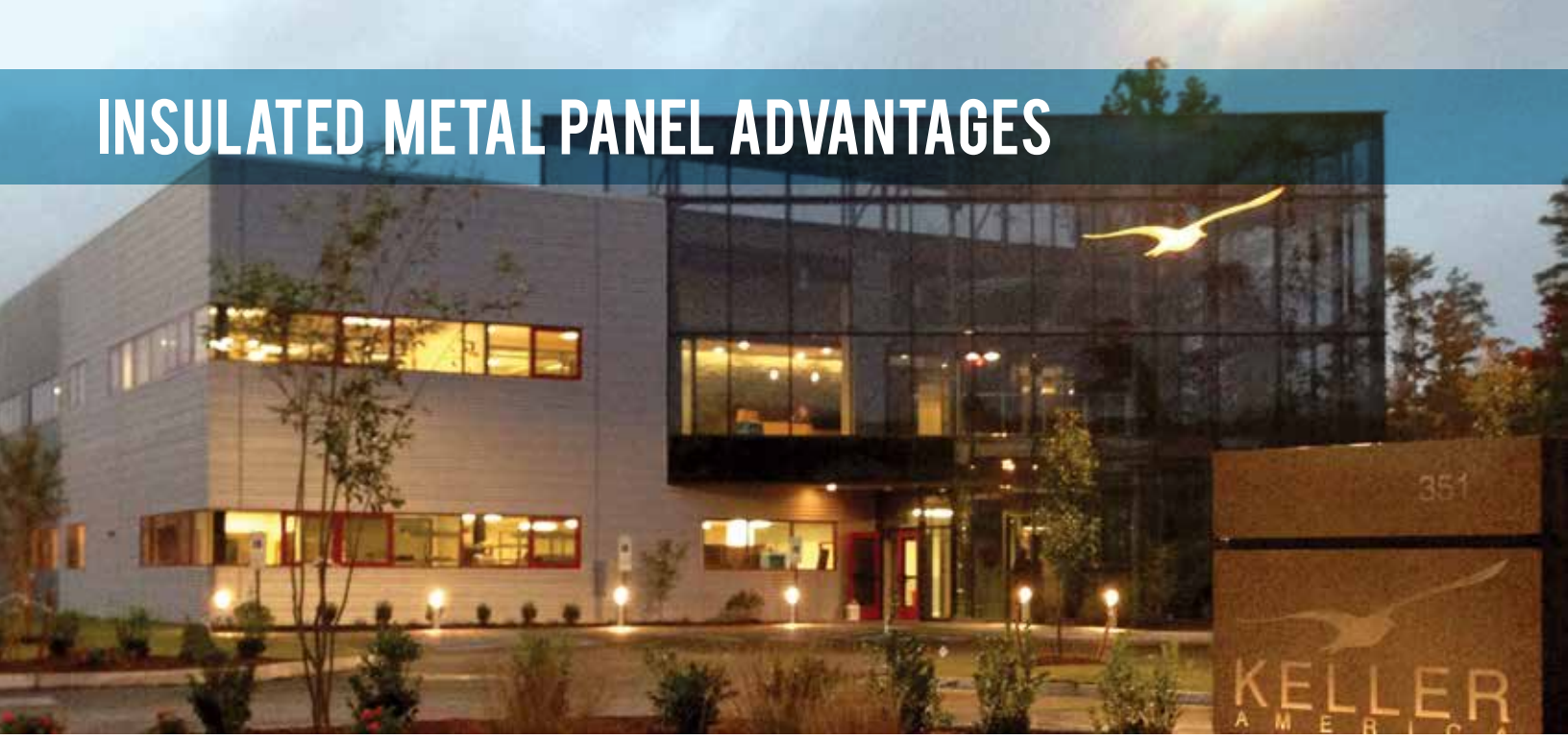

Safer & More Cost-Effective than Tilt-Wall

Insulated metal panels offer a much safer and cost effective solution to tilt wall construction. Not to mention, IMPs are recyclable. Both costly and time consuming, tilt wall construction also requires the use of heavy equipment. Insulated Metal Panels offer sustainable construction, with far less construction time and higher insulation values.

- Insulation R-values are higher with insulated metal panels than tilt wall construction
- Installation of insulated metal panels is faster, easier and safer for crews, as the panels are much lighter and easier to handle
- Fewer trades are required for the installation of insulated metal panels, which means less heavy equipment and fewer crews
- Insulated metal panels can be installed in virtually any weather condition, as opposed to tilt wall which leaves you at the mercy of unpredictable climatic conditions which can make construction schedules difficult to meet
- Concrete walls may require an interior liner, where insulated metal panels include a finished interior
- Insulated panels support LEED® and green building design

NBS Insulated Metal Panels are Green

Designed to offer superior thermal capabilities, our insulated metal panels minimize the use of the energy necessary to heat and cool your building. By using recyclable materials to manufacture these panels, they become 100% recyclable products, with finishes that are engineered for a reduced carbon footprint, maximum solar reflectance, and thermal emissivity.

NBS Insulated Panels can also contribute significantly towards LEED® certification of your building. The blowing agents used in our panels meet or exceed the regulatory standards which contributes to the reduction of global warming potential (GWP). Our panels have no ozone depleting potential, nor do they produce volatile organic compounds.

- Insulated metal panels contain a minimum of 30% recycled steel content
- 100% recyclable and reusable at the end of its service life
- Contribute to LEED® credits and net-zero energy targets

AdobeTexture™ Finish Option

AdobeTexture™ factory finish coated wall panels offer a multi-textured profile with a matte finish that simulates a troweled stucco appearance. This unique patented process eliminates the need for additional or factory applied stucco coatings.

The panel's exterior stucco-like surface is a hard aggregated fiber-reinforced polymer finish. This factory-rolled texture combines an attractive appearance with durability, resisting the effects of impact, abrasion and weather. The light embossed interior panel face can act as a finished interior wall. The AdobeTexture™ insulated wall panels deliver excellent energy efficiency.

- Eliminates need for field coatings
- Breakthrough technology brings stucco look and texture to insulated wall panels
- Same easy installation as standard insulated wall panels
- Eliminates multi-step field assembly currently needed for stud and stucco systems
- Self-aligning double tongue and groove with concealed fastener joints

AdobeTexture™ Wall Panels

Exterior Texture: AdobeTexture | Interior Texture: Light Embossed

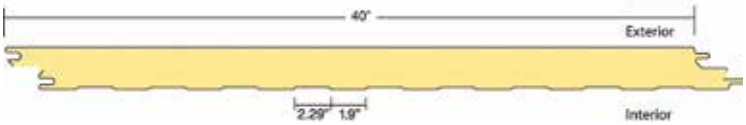

COLOR SELECTION

NBS insulated panel coatings feature vivid, fade-resistant color, incredible durability and environmentally friendly cool technology originally developed for stealth aircrafts in the U.S. military. This is by far the best paint system available on the market for commercial buildings.

To be considered cool, products must have a solar reflectance of at least 25%. Solar reflectance is the measure of a panel's ability to not absorb certain wavelengths of the sun. Another important factor is thermal emittance, the measure of a panel's ability to release heat that it has absorbed. Put these two factors together and you get the solar reflectance index, the measure of a panel's ability to reflect solar heat. Using insulated wall and roof panels as part of your whole cool-coated metal system can reduce energy consumption by more than 40% (as reported by the Oak Ridge National Laboratory).

Exterior Colors - PVDF Finish

Regal White
IR .71 SRI 86

Warm White
IR .59 SRI 69

Surrey Beige
IR .50 SRI 56

Pearl Gray
IR .50 SRI 56

Royal Blue
IR .29 SRI 29

Cypress Green
IR .32 SRI 32

AdobeTexture™ Wall Panels

Regal White Adobe

Sandstone Adobe

Surrey Beige Adobe

Pearl Gray Adobe

Interior Color - Polyester

Imperial White

NOTE: When using field-applied coatings, always order Imperial White Polyester for the exterior coating.

TESTING & APPROVALS

NBS insulated wall and roof panels have been extensively tested under a variety of North American Standards to ensure compliance with various building codes and industry standards.

Insulated Wall Panels

- ASTM C518: Thermal Transmission
- ASTM D1929: Ignition Properties
- ASTM E72: Structural Strength
- ASTM E84: Flame Spread
- ASTM E283: Air Infiltration
- ASTM E119: Fire Endurance (1hr test with fire panel)
- ASTM E331: Water Infiltration
- ASTM E711: Heat of Combustion
- FM 4880: Class 1 Fire Rating
- FM4881: Wall System
- Florida (FL) Approved
- Miami-Dade Approved
- CAN/ULC Testing
  S101 Fire Endurance (1hr test with fire panel)
  S138 Fire Endurance
  S102, S126 Flame Spread
  S127 Flammability
  S134 Fire Test of Exterior

Insulated Roof Panels

- ASTM C518: Thermal Transmission
- ASTM D1929: Ignition Properties
- ASTM E72: Structural Strength
- ASTM E84: Flame Spread/Smoke Index
- ASTM E108: Fire Testing
- ASTM E1646: Water Infiltration
- ASTM E1680: Air infiltration
- FM 4471: Class A Fire Rating
- FM 4471: Class 1-SH Severe Hail Damage
- FM 4471: Wind Uplift Approvals
- FM 1-60: Fire Testing
- FM 1-90, FM 1-105, FM 1-135: (SR2 only)
- FM 4880: Class 1 Fire Rating
- FM 4881: Class 1 Ext Wall System
- Florida (FL) Approved
- CAN/ULC Testing
  S138 Fire Endurance
  S102, S126 Flame Spread
  S127 Flammability
  S134 Fire Test of Exterior

NUCOR BUILDING SYSTEMS

With four full-service plants strategically located throughout the country, Nucor Building Systems has the capacity to meet your needs.

INDIANA
305 Industrial Parkway
Waterloo, IN 46793
(260) 837-7891

SOUTH CAROLINA
200 Whetstone Rd.
Swansea, SC 29160
(803) 568-2100

TEXAS
600 Apache Trail
Terrell, TX 75160
(972) 524-5407

UTAH
1050 North Watery Lane
Brigham City, UT 84302
(435) 919-3100

NUCOR BUILDING SYSTEMS

WWW.NUCORBUILDINGSYSTEMS.COM

NBS10989

Reflection Stone®
Masonry Units

Available in Full Veneer and Thin Veneer Units

Full Veneer Shapes & Sizes

- Reflection Stone® ..... Page 84
- Reflection Stone GRAND® ... Page 86
- Reflection Brick® ..... Page 88

Thin Veneer Shapes & Sizes

- Reflection Stone® ..... Page 85
- Reflection Stone GRAND® ... Page 87
- Reflection Brick® ..... Page 89

Reflection Stone®
Masonry Units

Innovative Stone Appearance

Architects and designers across the country are specifying Reflection Stone® Masonry Units to achieve a natural stone expression with the added benefits of concrete masonry construction. Our manufacturing process and integral coloring system creates an impressive face texture and inherently strong masonry unit. Easy installation makes Reflection Stone® Masonry Units an ideal solution for interior and exterior applications.

Design Flexibility

Reflection Stone® Masonry Units are available in three size modules: **Reflection Stone®, Reflection Stone GRAND®, and Reflection Brick®**. Each collection can be installed independently or blended together for maximum design flexibility.

Each collection is manufactured in layers of varying sized units. Because of their modular shapes and sizes, masons can easily lay units in random patterns. Assorted sizes help mirror the irregular pattern natural stone presents.

Reflection Stone® GRAND Masonry Units (Shown blended with Reflection Stone® Masonry Units) – Enchantment

Reflection Brick® Masonry Units – Inspired (Tumbled)

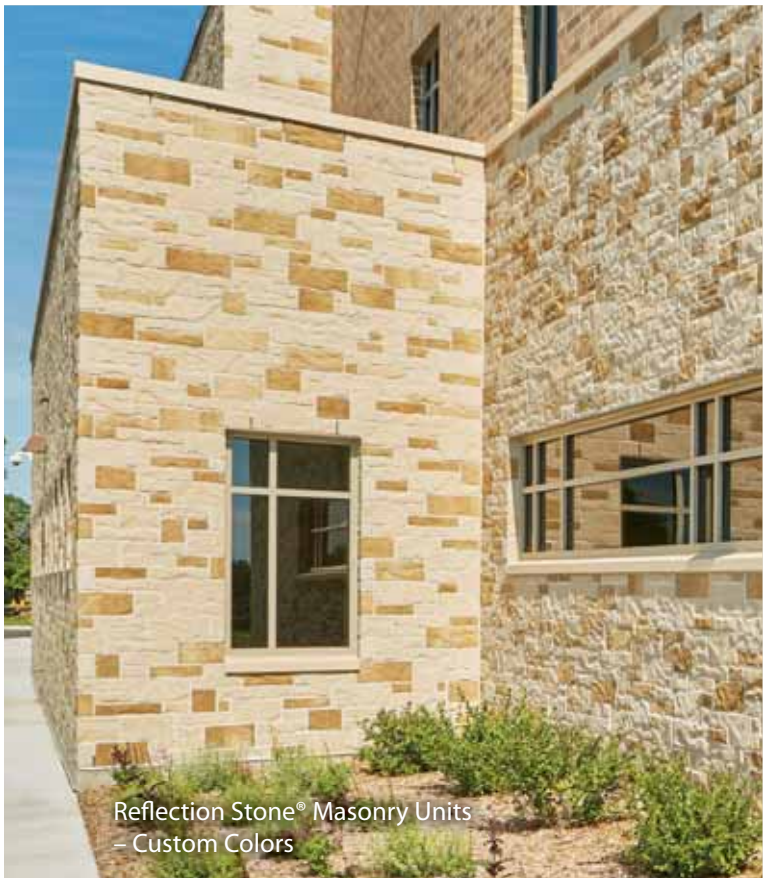

Reflection Stone® Masonry Units – Custom Colors

Reflection Stone® Masonry Units

Color Options

Hues that Mirror Mother Nature

Reflection Stone® Masonry Units are crafted in natural color blends. Rich textures embody the pure aesthetics of hand-hewn stone.

Reflection Stone® and Reflection Stone GRAND® Masonry Units – Enchantment

Reflection Stone® & Reflection Stone GRAND® Color Options

Clarity

Devotion

Noble

Promise

Enchantment

Inspired

Pure

Stillness

Reflection Stone® & Reflection Stone GRAND® Tumbled Color Options

Clarity Tumbled

Devotion Tumbled

Noble Tumbled

Promise Tumbled

Enchantment Tumbled

Inspired Tumbled

Pure Tumbled

Stillness Tumbled

Reflection Stone® Masonry Units – Custom Colors

Reflection Brick® Color Options

Clarity

Devotion

Noble

Promise

Enchantment

Inspired

Pure

Stillness

Reflection Brick® Tumbled Color Options

Clarity Tumbled

Devotion Tumbled

Noble Tumbled

Promise Tumbled

Enchantment Tumbled

Inspired Tumbled

Pure Tumbled

Stillness Tumbled

Reflection Stone® Masonry Units – Enchantment

Unique Combinations

Create truly one-of-a-kind looks by ordering multiple colors and combining them at different percentages in the field. The modular design of Reflection Stone® allows for countless size and color combinations.

Reflection Stone® Color Combinations *(Percentages of each color are noted)*

Stillness/Noble Tumbled (50/50)

Pure/Enchantment Tumbled (70/30)

Stillness/Enchantment Tumbled (50/50)

Promise/Devotion (60/40)

Promise/Clarity (60/40)

Noble/Clarity Tumbled (70/30)

Inspired/Clarity (50/50)

Devotion/Noble (60/40)

Clarity/Promise/Devotion Tumbled (80/10/10)

Clarity/Promise Tumbled (60/40)

Reflection Stone® Masonry Units

Unmatched Strength

Durable & Long Lasting Beauty

By employing advanced manufacturing technologies, Reflection Stone® Masonry Units combine unmatched strength and durability, making units a long lasting choice for residential and commercial projects.

- Very low maintenance
- Resists fire, warping and rot
- High compressive strength
- Solid concrete units with modular shapes
- Low moisture absorption
- Through-body color
- Units meet/exceed ASTM C90 and ASTM C1634

Reflection Brick® Masonry Units – Inspired (Tumbled)

Reflection Stone® Masonry Units – Custom Colors and Heritage Collection™ Designer Concrete Brick – Sand Castle Blend and Tuscany Villa Blend

Reflection Stone® Masonry Units
– Enchantment

Reflection Stone® and Reflection Stone GRAND® Masonry Units
– Enchantment

Reflection Stone® Masonry Units

SHAPES & SIZES

REFLECTION STONE® MASONRY UNITS

Reflection Stone mirrors the character and charm of natural stone, a timeless look that is still desired after centuries of use. Rich textures and alluring color blends impart an enchanting façade that affords the pure aesthetics of hand hewn stone.

REFLECTION STONE FULL VENEER UNITS

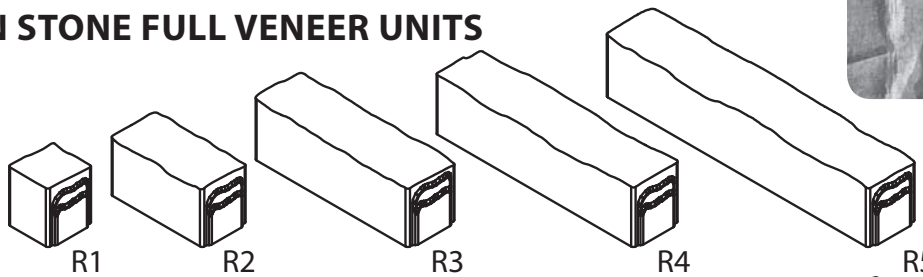

R1 R2 R3 R4 R5

Reflection Stone®
Masonry Units

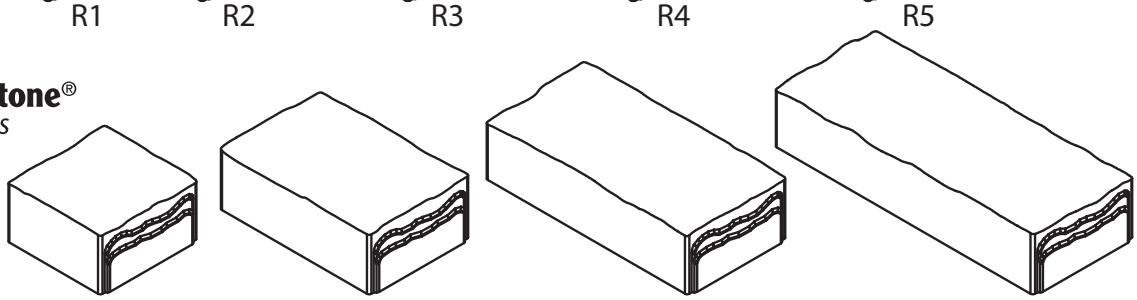

R6 R7 R8 R9

Product	Size H x D x L (inches and mm)
Reflection Stone- R1	3¼ x 3¾ x 3¼ 83 x 95 x 83
Reflection Stone- R2	3¼ x 3¾ x 7 83 x 95 x 178
Reflection Stone- R3	3¼ x 3¾ x 10¾ 83 x 95 x 273
Reflection Stone- R4	3¼ x 3¾ x 14½ 83 x 95 x 369
Reflection Stone- R5	3¼ x 3¾ x 18¼ 83 x 95 x 464

Product	Size H x D x L (inches and mm)
Reflection Stone- R6	7 x 3¾ x 7 178 x 95 x 178
Reflection Stone- R7	7 x 3¾ x 10¾ 178 x 95 x 273
Reflection Stone- R8	7 x 3¾ x 14½ 178 x 95 x 369
Reflection Stone- R9	7 x 3¾ x 18¼ 178 x 95 x 464

SF/ Layer	SF/ Pallet	Lbs./ Pallet
12.25	73.5	3120

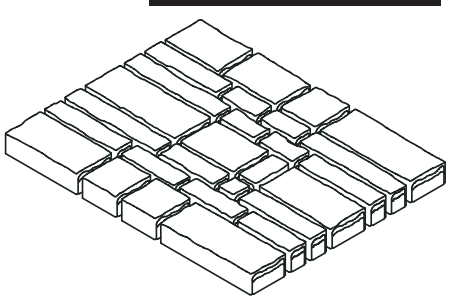

Pallet Layer

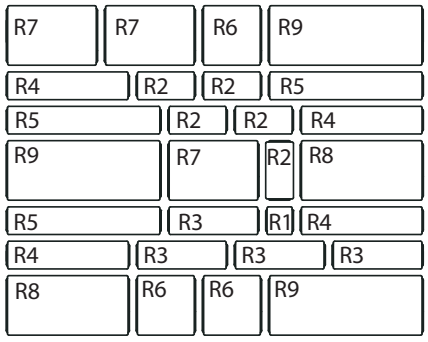

All dimensions nominal.

Reflection Stone® Masonry Units

SHAPES & SIZES – FACES & CORNERS

REFLECTION STONE® THIN VENEERS – FIELD APPLIED

Product	Size H x D x L (inches and mm)
Reflection Stone Thin Veneer- RTV1	3¼ x 1 x 3¼ 83 x 25 x 83
Reflection Stone Thin Veneer- RTV2	3¼ x 1 x 7 83 x 25 x 178
Reflection Stone Thin Veneer- RTV3	3¼ x 1 x 10¾ 83 x 25 x 273
Reflection Stone Thin Veneer- RTV4	3¼ x 1 x 14½ 83 x 25 x 369
Reflection Stone Thin Veneer- RTV5	3¼ x 1 x 18¼ 83 x 25 x 464
Reflection Stone Thin Veneer- RTV6	7 x 1 x 7 178 x 25 x 178
Reflection Stone Thin Veneer- RTV7	7 x 1 x 10¾ 178 x 25 x 273
Reflection Stone Thin Veneer- RTV8	7 x 1 x 14½ 178 x 25 x 369
Reflection Stone Thin Veneer- RTV9	7 x 1 x 18¼ 178 x 25 x 464

Faces

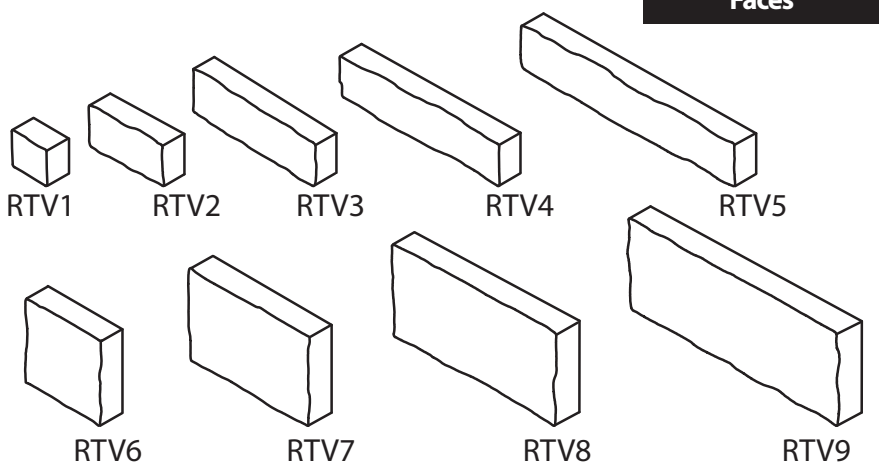

SF/ Layer	Layers/ Pallet	SF/ Pallet	Lbs./ Pallet
12.25	10	122.5	1840

** Reflection Stone GRAND thin veneer thickness will range from 3/4" to 1 1/4".*

Corners

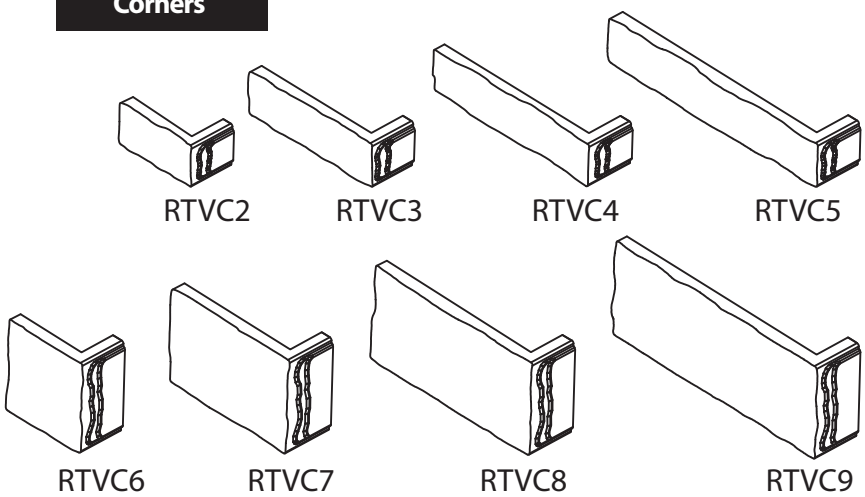

** Reflection Stone GRAND thin veneer thickness will range from 3/4" to 1 1/4".*

***All Return Ends are 3 3/4" in depth.*

LF/ Box	SF/ Box	Lbs./ Box
4.57	6.22	65

Product	Size H x D x L (inches and mm)	Pcs/ Box
Reflection Stone Thin Veneer Corner- RTVC2	3¼ x 1 x 7 83 x 25 x 178	2
Reflection Stone Thin Veneer Corner- RTVC3	3¼ x 1 x 10¾ 83 x 25 x 273	2
Reflection Stone Thin Veneer Corner- RTVC4	3¼ x 1 x 14½ 83 x 25 x 369	2
Reflection Stone Thin Veneer Corner- RTVC5	3¼ x 1 x 18¼ 83 x 25 x 464	1
Reflection Stone Thin Veneer Corner- RTVC6	7 x 1 x 7 178 x 25 x 178	1
Reflection Stone Thin Veneer Corner- RTVC7	7 x 1 x 10¾ 178 x 25 x 273	1
Reflection Stone Thin Veneer Corner- RTVC8	7 x 1 x 14½ 178 x 25 x 369	1
Reflection Stone Thin Veneer Corner- RTVC9	7 x 1 x 18¼ 178 x 25 x 464	1

All dimensions nominal.

Reflection Stone GRAND® Masonry Units

SHAPES & SIZES

REFLECTION STONE GRAND® FULL VENEER

Reflection Stone *GRAND*®
Masonry Units

Left photo shown in GRAND only.

Right photo shows a combination of Reflection Stone® Masonry Units and Reflection Stone GRAND® Masonry Units with a random pattern.

Standard Units

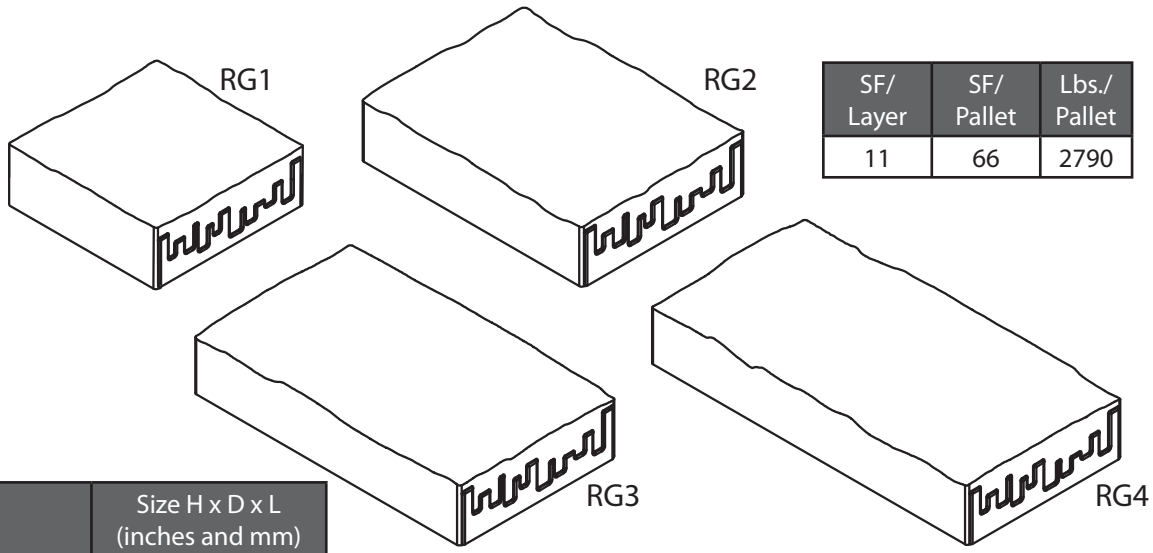

SF/ Layer	SF/ Pallet	Lbs./ Pallet
11	66	2790

Product	Size H x D x L (inches and mm)
Reflection Stone GRAND- RG1	$10^{3}/_{4}$ x $3^{3}/_{4}$ x $10^{3}/_{4}$ 273 x 95 x 273
Reflection Stone GRAND- RG2	$10^{3}/_{4}$ x $3^{3}/_{4}$ x $14^{11}/_{16}$ 273 x 95 x 373
Reflection Stone GRAND- RG3	$10^{3}/_{4}$ x $3^{3}/_{4}$x $18^{7}/_{16}$ 273 x 95 x 468
Reflection Stone GRAND- RG4	$10^{3}/_{4}$ x $3^{3}/_{4}$ x $22^{3}/_{16}$ 273 x 95 x 563

Pallet Layer

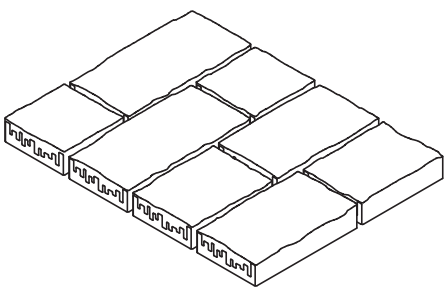

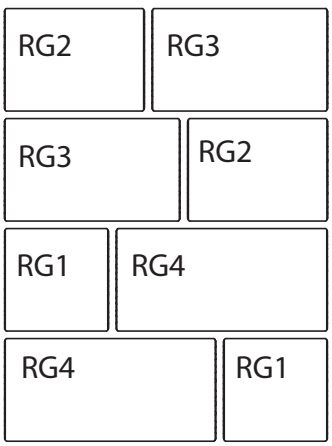

All dimensions nominal.

Reflection Stone GRAND® Masonry Units

SHAPES & SIZES – FACES & CORNERS

REFLECTION STONE GRAND® THIN VENEERS

Left photo shown in GRAND only.

Right photo shows a combination of Reflection Stone® Masonry Units and Reflection Stone GRAND® Masonry Units with a random pattern.

Faces

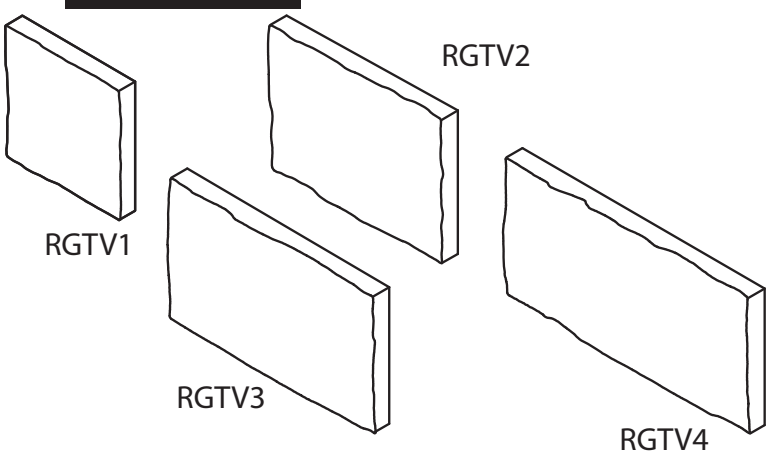

Product	Size H x D x L (inches and mm)
Reflection Stone GRAND Thin Veneer- RGTV1	$10^{3}/_{4}$ x 1 x $10^{3}/_{4}$ 273 x 25 x 273
Reflection Stone GRAND Thin Veneer- RGTV2	$10^{3}/_{4}$ x 1 x $14^{11}/_{16}$ 273 x 25 x 373
Reflection Stone GRAND Thin Veneer- RGTV3	$10^{3}/_{4}$ x 1 x $18^{7}/_{16}$ 273 x 25 x 468
Reflection Stone GRAND Thin Veneer- RGTV4	$10^{3}/_{4}$ x 1 x $22^{3}/_{16}$ 273 x 25 x 563

** Reflection Stone GRAND thin veneer thickness will range from 3/4" to 1 1/4".*

SF/ Layer	Layers/ Pallet	SF/ Pallet	Lbs./ Pallet
11	10	110	1650

Corners

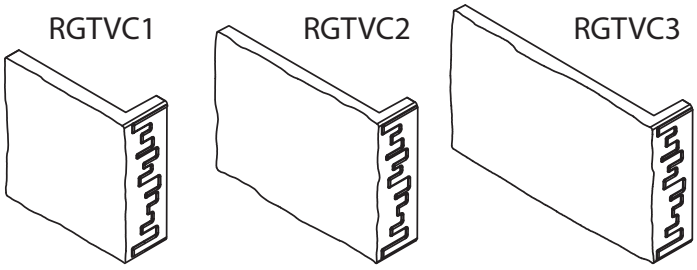

Product	Size H x D x L (inches and mm)	Pcs/ Box
Reflection Stone GRAND Thin Veneer Corner- RGTVC1	$10^{3}/_{4}$ x 1 x $10^{3}/_{4}$ 273 x 25 x 273	2
Reflection Stone GRAND Thin Veneer Corner- RGTVC2	$10^{3}/_{4}$ x 1 x $14^{11}/_{16}$ 273 x 25 x 373	2
Reflection Stone GRAND Thin Veneer Corner- RGTVC3	$10^{3}/_{4}$ x 1 x $18^{7}/_{16}$ 273 x 25 x 468	2

** Reflection Stone GRAND thin veneer thickness will range from 3/4" to 1 1/4".*

***All Return Ends are 3 3/4" in depth.*

LF/ Box	SF/ Box	Lbs./ Box
5.53	8.69	92

All dimensions nominal.

Reflection Brick® Masonry Units

SHAPES & SIZES

REFLECTION BRICK® FULL VENEER

Standard Units

Product	Size H x D x L (inches and mm)
Reflection Brick- RB2	3¼ x 3¾ x 7 83 x 95 x 178
Reflection Brick- RB3	3¼ x 3¾ x 10¾ 83 x 95 x 273
Reflection Brick- RB4	3¼ x 3¾ x 14½ 83 x 95 x 369
Reflection Brick- RB5	3¼ x 3¾ x 18¼ 83 x 95 x 464

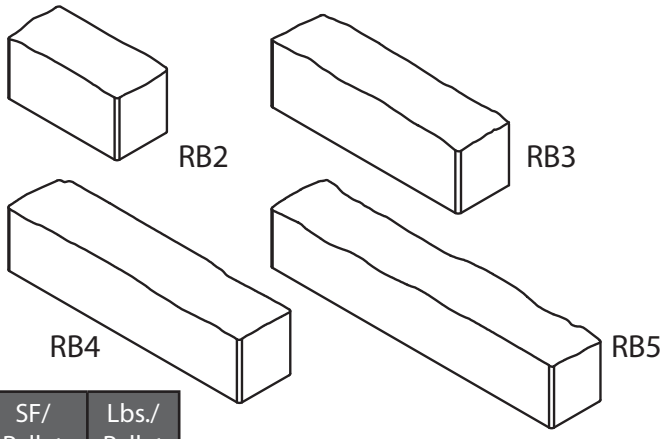

SF/ Layer	SF/ Pallet	Lbs./ Pallet
13.3	80	3100

Pallet Layer

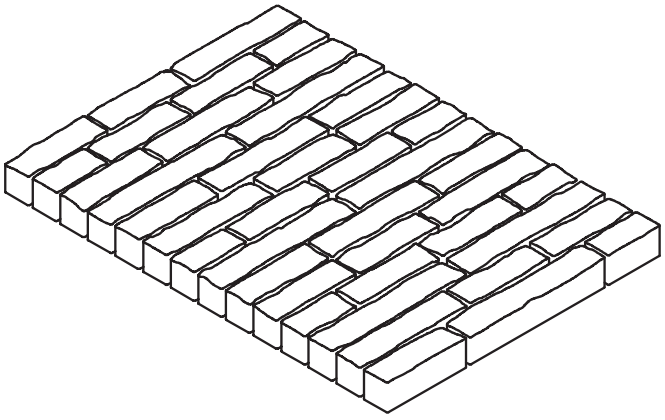

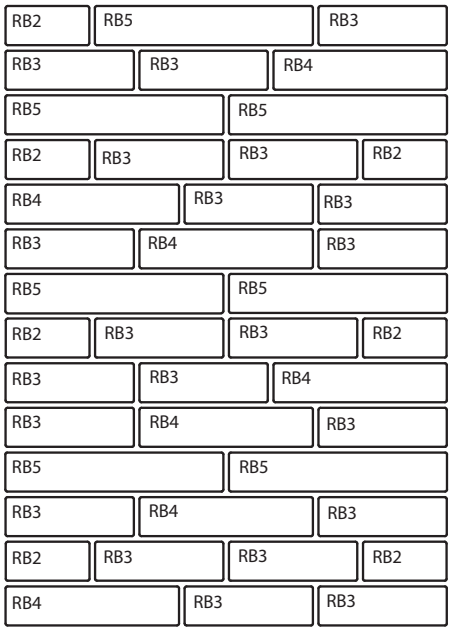

All dimensions nominal.

Reflection Brick® Masonry Units

SHAPES & SIZES – FACES & CORNERS

REFLECTION BRICK® THIN VENEERS

Faces

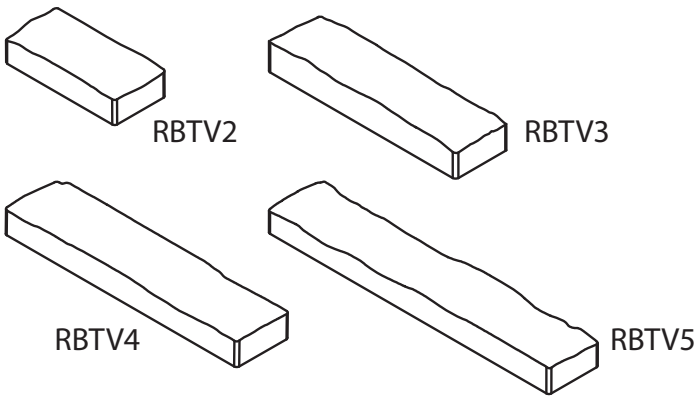

Product	Size H x D x L (inches and mm)
Reflection Brick Thin Veneer- RBTV2	3¼ x 1 x 7 83 x 25 x 178
Reflection Brick Thin Veneer- RBTV3	3¼ x 1 x 10¾ 83 x 25 x 273
Reflection Brick Thin Veneer- RBTV4	3¼ x 1 x 14½ 83 x 25 x 369
Reflection Brick Thin Veneer- RBTV5	3¼ x 1 x 18¼ 83 x 25 x 464

** Reflection Brick thin veneer thickness will range from 3/4" to 1 1/4".*

SF/ Layer	Layers/ Pallet	SF/ Pallet	Lbs./ Pallet
13.3	10	133	1995

Corners

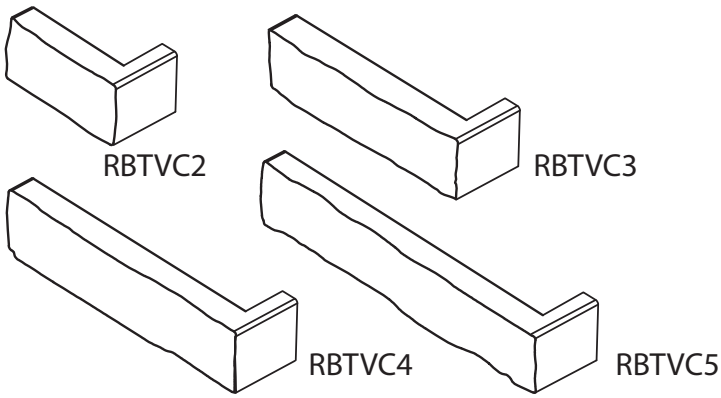

Product	Size H x D x L (inches and mm)	Pcs/ Box
Reflection Brick Thin Veneer- RBTVC2	3¼ x 1 x 7 83 x 25 x 178	3
Reflection Brick Thin Veneer- RBTVC3	3¼ x 1 x 10¾ 83 x 25 x 273	8
Reflection Brick Thin Veneer- RBTVC4	3¼ x 1 x 14½ 83 x 25 x 369	3
Reflection Brick Thin Veneer- RBTVC5	3¼ x 1 x 18¼ 83 x 25 x 464	3

LF/ Box	SF/ Box	Lbs./ Box
5.1	6.93	71

** Reflection Brick thin veneer thickness will range from 3/4" to 1 1/4".*

***All Return Ends are 3 3/4" in depth.*

All dimensions nominal.

BAY Electrical Solutions

Prepared For:
CED Madison
Logan Webb

Job Name:
Exclusively Roses Exterior
Lighting Layout
Version B

Scale: as noted

Date:10/22/2019

Filename: CED Exclusively Roses Rev1.AGI

Drawn By: Andrew Kuehn

The Lighting Analysis, enlayout, Energy Analysis and/or Visual Simulation (*Lighting Design) provided by Bay Elec represents an anticipated prediction of lighting system performance based upon design parameters and information supplied by others. These design parameters and information provided by others have not been field verified by Bay Elec and therefore actual measured results may vary from the actual field conditions. BAY ELEC recommends that design parameters and other information be field verified to reduce variation. BAY ELEC neither warranties, either implied or stated with regard to actual measured light levels or energy consumption levels as compared to those illustated by the Lighting Design. BAY ELEC neither warranties, either implied or stated, nor represents the appropriateness, completeness or suitability of the Lighting Design intent as compliant with any applicable regulatory code requirements with the exception of those specifically stated on drawings created and submitted by BAY ELEC. The Lighting design is issued, in whole or in part, as advisory documents for informational purposes and is not intendedfor construction nor as being part of a project's construction documentation package.

Filename: C:\Users\Inside Sales\Documents\Andrew\AGI32\2019\October\CED Exclusively Roses Rev1.AGI

Calculation Summary

Label	CalcType	Units	Avg	Max	Min	Avg/Min	Max/Min	Description	PtSpcLr	PtSpcTb	Meter Type
Planar_Planar_1	Illuminance	Fc	0.87	11.7	0.0	N.A.	N.A.	Readings taken at ground	10	10	Normal

Luminaire Schedule

Symbol	Qty	Tag	Label	Arrangement	Lum. Lumens	Arr. Lum. Lumens	LLF	Description	Lum. Watts	Arr. Watts	Total Watts
	7	W1	W34-70L	SINGLE	7188	7188	1.000	W34-70L	69.6	69.6	487.2
	1	W2	W34-30L	SINGLE	3105	3105	1.000	W34-30L	29	29	29
	3	W3	W34-90L	SINGLE	9087	9087	1.000	W34-90L	87.4	87.4	262.2
	2	L	LOT4T160 D10	SINGLE	17037	17037	1.000	Type IV	161.1	161.1	322.2

Expanded Luminaire Location Summary

LumNo	Tag	X	Y	MTG HT	Orient	Tilt
1	W2	339.5	325.25	10	90	0
2	W3	363.75	300.002	15	0.562	0
3	W1	187.75	269	15	180	0
4	W3	363.75	249.002	15	0.562	0
5	W1	188	234.25	15	180	0
6	W1	188.25	199.5	15	180	0
7	W3	364.25	198.002	15	0.562	0
8	W1	347.002	173.25	15	270.408	0
9	W1	300.169	172.917	15	270.408	0
10	W1	253.335	172.583	15	270.408	0
11	W1	206.502	172.25	15	270.408	0
12	L	430.5	92	20	180	0
13	L	212.5	29.5	20	90	0
Total Quantity: 13						

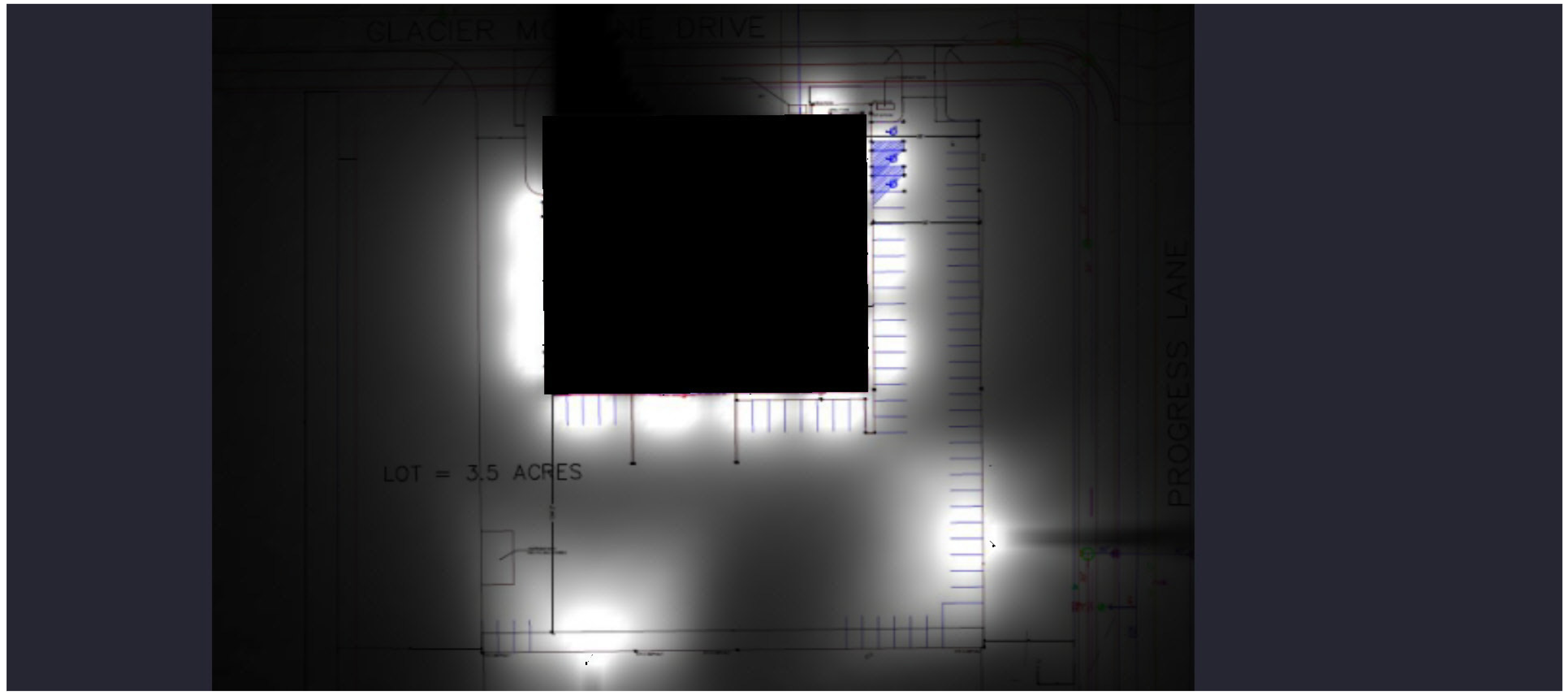

NOTES:
* The light loss factor (LLF) is a product of many variables, only lamp lumen depreciation (LLD) has been applied to the calculated results unless otherwise noted. The LLD is the result (quotient) of mean lumens / initial lumens per lamp manufacturers' specifications.

* Illumination values shown (in footcandles) are the predicted results for planes of calculation either to the plane of calculation.

* The calculated results of this lighting simulation represent an anticipated prediction of system performance. Actual measured results may vary from the anticipated performance and are subject to means and methods which are beyond the control of the designer.

* Mounting height determination is job site specific, our lighting simulations assume a mounting height (insertion point of the luminaire symbol) to be taken at the top of the symbol for ceiling mounted luminaires and at the bottom of the symbol for all other luminaire mounting configurations.

* RAB Lighting Inc. luminaire and product designs are protected under U.S. and International intellectual property laws. horizontal, vertical or inclined as designated in the calculation summary. Meter orientation is normal Patents issued or pending apply.

The Lighting Analysis, ezLayout, Energy Analysis and/or Visual Simulation ("Lighting Design) provided by Bay Elec represents an anticipated prediction of lighting system performance based upon design parameters and information supplied by others. These design parameters and information provided by others have not been field verified by Bay Elec and therefore actual measured results may vary from the actual field conditions. BAY ELEC recommends that design parameters and other information be field verified to reduce variation. BAY ELEC neither warranties, either implied or stated with regard to actual measured light levels or energy consumption levels as compared to those illustrated by the Lighting Design. BAY ELEC neither warranties, either implied or stated, nor represents the appropriateness, completeness or suitability of the Lighting Design intent as compliant with any applicable regulatory code requirements with the exception of those specifically stated on drawings created and submitted by BAY ELEC. The Lighting design is issued, in whole or in part, as advisory documents for informational purposes and is not intendedfor construction nor as being part of a project's construction documentation package.

Scale: as noted

Date:10/22/2019

Filename: CED Exclusively Roses Rev1.AGI

Drawn By: Andrew Kuehn

Job Name:
Exclusively Roses Exterior
Lighting Layout
Version B

Prepared For:
CED Madison
Logan Webb

Filename: C:\Users\Inside Sales\Documents\Andrew\AGI32\2019\October\CED Exclusively Roses Rev1.AGI

BAY Electrical Solutions

CITY OF STOUGHTON
DEPARTMENT OF
PLANNING & DEVELOPMENT
207 S. Forrest Street, Stoughton, WI. 53589

(608) 873-6619 www.ci.stoughton.wi.us

RODNEY J. SCHEEL
DIRECTOR

November 5, 2019

Davis Steel Buildings, Inc.
Jeff Davis
3482 Orvold Park Dr,
McFarland, WI 53558

Dear Mr. Davis:

I have completed a review of the proposed building site plan for Exclusively Roses, 421 Glacier Moraine Drive, Stoughton, WI. 53589 – plan received 11/5/19. As noted, additional information may be required to be provided or shown on the plan.

1. The City currently owns the parcel for which this site plan has been prepared. The existing parcel will need to be split by certified survey map (CSM) and will need to be processed by the City. Any site plan approval will be subject to the sale of the property and recording of the CSM including any easements. We are basing this review on the proposed 3.5-acre parcel.

2. The property at 421 Glacier Moraine Drive is zoned PI – Planned Industrial. We believe the proposed uses are Light Industrial and Indoor Storage/Wholesaling which are permitted outright in the Planned Industrial district. **A letter summarizing the proposed uses has been provided.**

3. Light industrial land uses are defined as follows: "Light industrial land uses are industrial facilities at which all operations (with the exception of loading operations): 1) are conducted entirely within an enclosed building; 2) are not potentially associated with nuisances such as odor, noise, heat, vibration, and radiation which are detectable at the property line; 3) do not pose a significant safety hazard (such as danger of explosion); and 4) comply with all of the performance standards listed for potential nuisances in article VII. **The proposed use meets these requirements.**

   Applicable Regulations: All activities, except loading and unloading, shall be conducted entirely within the confines of a building. **The proposed use should meet this requirement.**

Parking requirements: One space per each employee on the largest work shift. **Sixty employees require sixty parking spaces. Sixty-six spaces are provided. The street cannot be used for required parking.**

4. Indoor Storage and wholesaling land uses are defined as follows: "Indoor storage and wholesaling land uses are primarily oriented to the receiving, holding, and shipping of packaged materials for a single business or a single group of businesses. With the exception of loading and parking facilities, such land uses are contained entirely within an enclosed building. Examples of this land use include conventional warehouse facilities, long-term indoor storage facilities, and joint warehouse and storage facilities".
   The use meets this description.

   Parking requirements: One space per 2,000 sf of gross floor area. **The primary use is light industrial. See #3 above.**

5. The parking aisle width for 90 degree parking shall be a minimum of 24 feet. **The plan meets this requirement.**

6. Handicap parking spaces shall be installed at a size, number, location, and with signage as specified by state and federal regulations. **Three handicap stalls are shown.**

7. Except for handicap parking stalls, the minimum parking stall length shall be 18 feet with a minimum width of 9 feet. **The plan meets this requirement.**

8. Per section 78-704 (13) (a), bicycle parking is required equal to 10% of the automobile parking space requirement. **Six bike spaces are required. The bike rack is shown on the plan.**

9. All off-street parking and traffic circulation areas shall be completed prior to building occupancy and shall be maintained in a dust-free condition at all times. In no instance or manner shall any off-street parking or traffic circulation area be used as a storage area, except as provided for by section 78-706. **Outdoor storage is not planned for this site and is not allowed without a conditional use permit.**

10. Off-street parking and traffic circulation design standards.
    (a) Surfacing and marking. All off-street parking and traffic circulation areas shall be paved with a hard, all-weather surface, to the satisfaction of the director of planning and development. Said surfaces intended for six or more parking stalls shall be marked in a manner which clearly indicates required parking spaces. **Expected**

    (b) Curbing. All off-street parking areas designed to have head-in parking within six and one-half feet of any lot line shall provide a tire bumper or curb of adequate height and which is properly located to ensure that no part of any

vehicle will project beyond the required setbacks of this chapter (see sections 78-402 and 78-403.) **N/A**

11. All curb openings for access drives shall have a maximum width of 30 feet for non-residential uses, as measured at the right-of-way line. Access drives may be flared between the right-of-way line and the roadway up to a maximum of five additional feet and may be exceeded with explicit Plan Commission approval. **The Plan Commission will need to approve the western access drive opening which is approximately 80 feet wide at the curb. There will be temporary access from Progress Lane during the construction phase while Glacier Moraine Drive is being constructed.**

12. The minimum paved surface setback from a side lot line is 5 feet while the minimum is 10 feet from a right-of-way line. **The plan meets these requirements.**

13. Off-street loading stall requirements per section 78-705. **There is ample room for loading. Backing into and from the street is not allowed.**

14. The proposed use is consistent with the Comprehensive Plan Planned Land Use Map.

15. The building setback requirements of the Planned Industrial district are as follows:
    - Building to front or street side lot line: 20 feet
    - Building to side lot line: 10 feet
    - Building to rear lot line: 20 feet

    These requirements have been met.

16. The maximum building height requirement is 40 feet. **The plan meets this requirement.**

17. The maximum floor area ratio is 1. **The plan meets this requirement.**

18. A landscaping plan which meets the requirements of Article VI of the zoning code will need to be provided. **The plan meets these requirements.**

19. There are no bufferyard requirements when adjacent property is of the same zoning classification.

20. Exterior lighting standards.
    All off-street parking areas shall be lit to ensure safe and efficient use. An illumination level of between 0.4 and 1.0 footcandles are recommended and said illumination shall not exceed the standards of section 78-707. The maximum lighting as measured at the property line is 0.5 footcandles. The maximum average on-site lighting shall be 2.4 footcandles. The maximum fixture height shall be 25 feet from grade. The minimum lighting standard for parking areas used after sunset shall be 0.2 foot-candles. <u>The lighting element shall not be visible from the residentially zoned properties to the north.</u> **A compliant photometric plan has been provided.**

21. All exterior trash storage areas shall be located within a gated enclosure which completely screens the view a said trash. The exterior of said enclosure shall be constructed of some or all of the materials used on the main building. **The plan meets this requirement.**

22. The minimum landscape surface ratio is 25 %. **The site meets this requirement.**

23. A stormwater management and erosion control plan, application and fees are required. Dane County Land and Water Resources, the City's consultant, will review the plan and perform inspections. **The plans, application and fees will need to be submitted to the City.**

24. Architectural and design elements shall be compatible with the surrounding area and community standards and shall minimize user-specific design elements as determined appropriate by the Planning Commission. **Architectural design is part of the site plan review process as determined by the Plan Commission. Color charts have been provided.**

25. Except for exposed foundations not to exceed three feet in height from adjacent grade, non-single family development shall employ only high-quality, decorative exterior construction materials on the visible exterior of the following portions of all structures:
    - Any portion of the structure within 50 feet of an adjacent residentially zoned property; **N/A**
    - Any portion of the structure located within 50 feet of a public right-of-way;
    - Any other portion of the structure visible from a public street… The following exterior construction materials shall not be considered "high quality, decorative": non-decorative concrete or cinder block, non-decorative concrete foundation walls or panels, non-decorative plywood, asphaltic siding, or other materials using exposed fastener systems or non-decorative surfaces as determined by the Planning Commission. However, such materials may be allowed by the Planning Commission as decorative elements.

    The exterior construction materials will need to meet these requirements.

26. Proposed utilities-including electrical transformers and HVAC locations shall be shown on the utility plan. **Contact Stoughton Utilities for electric, water and wastewater services. All utility easements will need to be identified on the utility plan. A right-of-way permit from the Stoughton Public Works Department will be necessary for work in the street right-of-way.**

27. Required off-street parking shall not be used for snow storage. **This is expected.**

28. Terrace trees must be installed according to Code Section 10-2 (d). **Contact the Public Works Department for more information at 608-873-6303.**

29. Any proposed signage will require a detailed plan and permit prior to installation. **Expected.**

30. State approved plans and appropriate City of Stoughton building permits are required before construction but are not necessary to begin the City review process.

If you have any questions, please contact me at 608-646-0421.

Sincerely,
City of Stoughton

Michael P. Stacey

Michael P. Stacey
Zoning Administrator/Assistant Planner