ROTARY PARK IMPROVEMENTS

FOR THE

CITY OF STOUGHTON

DANE COUNTY, WISCONSIN

MAY 2020

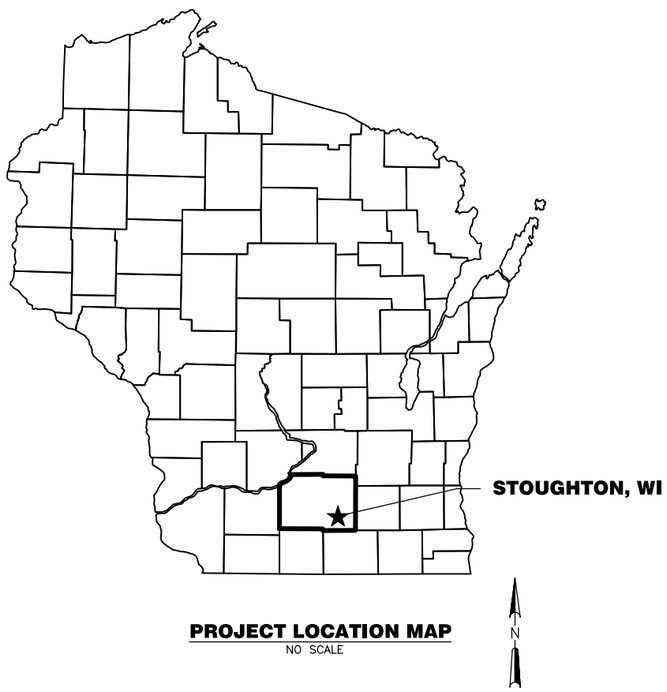

PROJECT LOCATION MAP
NO SCALE

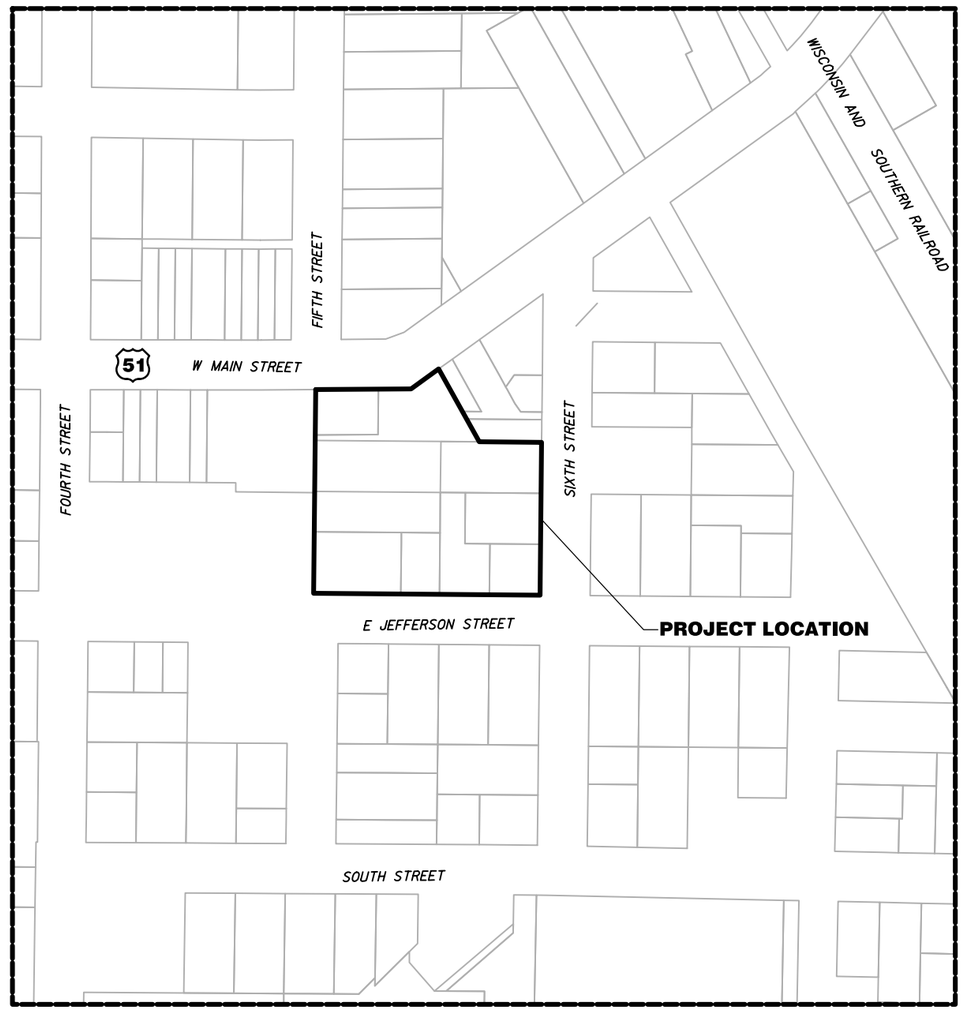

LIST OF DRAWINGS

SHEET NO.	DRAWING TITLE
1	TITLE SHEET
2	STANDARD NOTES AND SYMBOLS
3	EROSION CONTROL NOTES AND DETAILS
4	SITE AND UTILITY PLAN - BASE BID
5	GRADING PLAN - BASE BID
6	FOUNDATION PLAN AND SECTIONS - BASE BID
7	SITE AND UTILITY PLAN - ALTERNATIVE BID NO. 1
8	GRADING PLAN - ALTERNATIVE BID NO. 1

Strand Associates, Inc.
910 West Wingra Drive
Madison, WI 53715
608-251-4843
608-251-8655 fax
www.strand.com

CONTRACT NO. 5-2020

PROJECT LOCATION MAP

STRAND ASSOCIATES®

SHEET
1
JOB NO. 1040.128

UTILITY CONTACTS

ALLIANT ENERGY - GAS
DAN TREINEN
DanTreinen@alliantenergy.com
(P) (608) 877-1650

CHARTER COMMUNICATIONS - CABLE
DAVID MOLDENHAUER
david.moldenhauer@charter.com
(P) (608) 373-7538

AT&T - TELEPHONE/FIBER OPTIC
CAROL ANASON
ca2624@att.com
(P) (608)-252-2385

CITY OF STOUGHTON - PLANNING DEPT.
RODNEY SCHEEL - PLANNING DIRECTOR
RJScheel@ci.stoughton.wi.us
(P) (608) 873-6619

CITY OF STOUGHTON - PUBLIC WORKS DEPARTMENT
BRETT HEBERT - PUBLIC WORKS DIRECTOR
BHebert@ci.stoughton.wi.us
(P) (608) 877-8684

STOUGHTON UTILITIES
JILL WEISS, P.E. - UTILITIES DIRECTOR
JWeiss@StoughtonUtilities.com
(P) (608) 877-7423

STOUGHTON UTILITIES
SEAN GRADY - UTILITIES OPERATIONS SUPERINTENDENT
SOGrady@StoughtonUtilities.com
(P) (608) 877-7416

STOUGHTON UTILITIES - WATER
KENT THOMPSON - WATER SYSTEM SUPERVISOR
KThompson@StoughtonUtilities.com
(P) (608) 877-7422

STOUGHTON UTILITIES - SANITARY SEWER
BRIAN ERICKSON - WASTEWATER SYSTEM SUPERVISOR
BErickson@StoughtonUtilities.com
(P) (608) 877-7421

STOUGHTON UTILITIES - ELECTRICAL
BYRCE SIME - ELECTRIC SYSTEM SUPERVISOR
BSime@StoughtonUtilities.com
(P) (608) 877-7425

DIGGERS HOTLINE

Toll Free (800) 242-8511
Milwaukee Area (414) 259-1181
Hearing Impaired TDD (800) 542-2289
www.DiggersHotline.com

STANDARD SYMBOLS

PROPERTY LINE AND/OR RIGHT OF WAY
TEMPORARY EASEMENT
PERMANENT EASEMENT ON SEWER
SECTION CORNER
IP — IRON PIPE
PROPERTY IRON
MWEL — MONITORING WELL
BORE — SOIL BORING
BENCH MARK
BURIED TELEPHONE CABLE PEDESTAL
EXISTING UTILITY POLE
LIGHT POLE
TELEPHONE POLE
PROPANE TANK
MAIL BOX
SIGN
OBJECTS TO BE REMOVED
CONIFEROUS TREE
DECIDUOUS TREE
STUMP
BUSH
WETLAND
PAVED ROAD
SS — EXISTING CULVERT
EXISTING CULVERT IN PROFILE
ORIGINAL GROUND IN PROFILE
EXISTING CONTOUR
FENCE
GUARD RAIL
SILT FENCE
CONTROL POINT
GUY — GUY WIRE
INLET
INLET SQUARE
CATCH BASIN

MH — MANHOLE
FIRE HYDRANT
WV — WATER VALVE
CURB WATER BOX
SEPC — SEPTIC
SEPV — SEPTIC VENT
WELL — WELL
CAUTION — NOTATION FOR COMBUSTIBLE FLUIDS
6" — NEW WATER MAIN AND FIRE HYDRANT WITH AUXILIARY VALVE
6" SAN — NEW SANITARY SEWER AND MANHOLE
6" SAN — EXISTING SANITARY SEWER AND MANHOLE
SAN — WYE BRANCH
CASING PIPE
FO — FIBER OPTIC
SS — STORM SEWER
SAN — SANITARY SEWER
F — FORCE MAIN
E — ELECTRIC DUCT
STM — STEAM PIPING
CWR — CILLED WATER RETURN
CWS — CHILLED WATER SUPPLY
TV — TV CABLE
T — TELEPHONE
2" G — GAS MAIN
E — UNDERGROUND ELECTRIC CABLE
PROPOSED CONCRETE SIDEWALK
PROPOSED CURB AND GUTTER
PROPOSED GRAVEL SHOULDER

HORIZONTAL CONTROL TABLE

CP NO	DESCRIPTION	NORTHING	EASTING
CP-1	MAG NAIL	425159.61	866374.61
CP-2	MAG NAIL	425241.73	866226.67

VERTICAL BENCHMARK TABLE

BM NO	DESCRIPTION	ELEV.
BM-1	XXXXXXX	XXX.X
BM-2	XXXXXXX	XXX.X

STORM SEWER TABLE (ALTERNATIVE BID NO. 1)

STREET	STRUCTURE	SIZE	RIM/BOC ELEVATION	INVERT	DOWNSTREAM SIZE (IN)	LENGTH (FT)	DOWNSTREAM SLOPE
ROTARY PARK	AEW-1	12" AEW	-	871.25	-	-	-
	MH SS-1	4' DIA. MH	876.30	872.20	12"	28	3.40%
	INL 1.1	2'X3' BOX	877.20	873.20	12"	15	6.60%
	INL 1.2	2'X3' BOX	876.60	872.75	12"	55	1.00%

NO.	REVISIONS	DATE:

STANDARD NOTES AND SYMBOLS

ROTARY PARK IMPROVEMENTS
CITY OF STOUGHTON
DANE COUNTY, WISCONSIN

JOB NO. 1040.128
PROJECT MGR. ABC

STRAND ASSOCIATES®

SHEET 2

FLEXSTORM INLET FILTERS TO MEET DANE COUNTY EROSION CONTROL STANDARDS

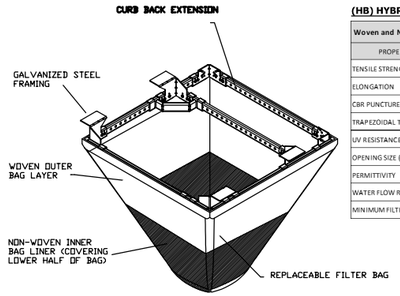

(HB) HYBRID FILTER BAG SPECIFICATIONS:

Woven and Non-Woven Geotextile Filter Bag Properties (Minimum Average Roll Values)			
PROPERTY	TEST METHOD	WOVEN (OUTER)	NON-WOVEN (LINER)
TENSILE STRENGTH	ASTM D4632	350 x 225 Lbs	100 Lbs
ELONGATION	ASTM D4632	20% x 15%	50%
CBR PUNCTURE	ASTM D6241	1000 Lbs	65 Lbs
TRAPEZOIDAL TEAR	ASTM D4533	110 x 75 Lbs	45 Lbs
UV RESISTANCE	ASTM D4355	90%	70%
OPENING SIZE (AOS)	ASTM D4751	20 US STD SIEVE	40 US STD SIEVE
PERMITTIVITY	ASTM D4491	1.5 Sec^{-1}	2.0 Sec^{-1}
WATER FLOW RATE	ASTM D4491	200 $gal/min/ft^2$	145 $gal/min/ft^2$
MINIMUM FILTER BAG VOLUME		2 CUBIC FT	

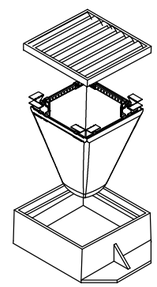

CATCH-IT INLET FILTER (Temporary Inlet Protection)

Neenah Casting	Inlet Type	Grate Size	Opening Size	Bag Cap (ft^3)	Flow Ratings (CFS)		ADS P/N
					HB (Hybrid Bag)	Bypass	
3067	Curb Box	35.25 x 17.75	33.0 x 15.0	4.4	2.0	5.8	62LCBEXTHB
3246A	Curb Box	35.75 x 23.875	33.5 x 21.0	4.2	1.1	3.3	62LCB3624HB
3030	Square/Rect (SQ)	23 x 16	20.5 x 13.5	1.6	0.7	2.2	62MCB2316HB
3067-C	Square/Rect (SQ)	35.25 x 17.75	33 x 15	3.2	1.0	5.2	62LSQ3618HB
R-2501	Round (RD)	~26	~24	2.3	0.8	5.2	62MRD26HB
R-1772/2560	Round (RD)	22.25-23.5	20.5-21	1.5	0.6	4.6	62MRD22HB

Installation Instructions:
1. Remove grate from the drainage structure
2. Clean stone and dirt from ledge (lip) of drainage structure
3. Drop the inlet filter through the clear opening such that the hangers rest firmly on the lip of the structure
4. Replace the grate and confirm it is not elevated more than 1/8"

Maintenance Guidelines:
1. Empty the sediment bag if more than half filled with sediment and debris
2. Remove the grate, engage the lifting points, and lift filter from the drainage structure
3. Dispose of sediment and debris as directed by the Engineer or Maintenance Contract
4. Alternatively, an industrial vacuum can be used to collect sediment from filter bag

FLEXSTORM INLET FILTERS CATCH IT

*TEMPORARY VERSION OF FLEXSTORM CATCH-IT BY ADS IS REQUIRED FOR INLET PROTECTION TYPE D FOR ALL INLETS. IF A FRAME SIZE DOES NOT EXIST FOR EXISTING INLETS OF NON-STANDARD DIMENSIONS, INLET PROTECTION TYPE D MAY BE USED.

FRAMED INLET PROTECTION REQUIRED BY DANE COUNTY

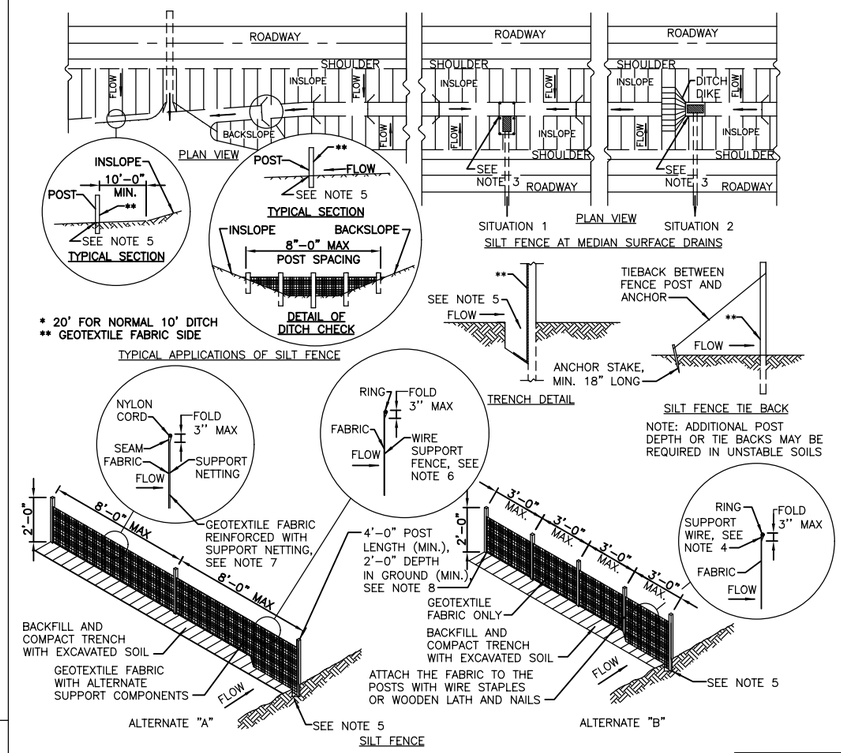

NOTES:
1. DETAILS OF CONSTRUCTION NOT SHOWN ON THIS DRAWING SHALL CONFORM TO THE PERTINENT REQUIREMENTS OF THE STANDARD SPECIFICATIONS AND APPLICABLE SPECIAL PROVISIONS.

2. WHEN POSSIBLE THE SILT FENCE SHOULD BE CONSTRUCTED IN AN ARC OR HORSESHOE SHAPE, WITH THE ENDS POINTING UPSLOPE TO MAXIMIZE BOTH STRENGTH AND EFFECTIVENESS.

3. CROSS BRACE WITH 2"x4" WOODEN FRAME OR EQUIVALENT AT TOP OF POSTS.

4. MINIMUM 14 GAGE WIRE REQUIRED, FOLD FABRIC 3" OVER THE WIRE AND STAPLE OR PLACE WIRE RINGS ON 12" C-C.

5. EXCAVATE TRENCH A MINIMUM OF 4" WIDE AND 6" DEEP TO BURY AND ANCHOR THE GEOTEXTILE FABRIC, FOLD MATERIAL TO FIT TRENCH AND BACKFILL AND COMPACT TRENCH WITH EXCAVATED SOIL.

6. WIRE SUPPORT FENCE SHALL BE 14 GAGE MINIMUM WOVEN WIRE WITH A MAXIMUM MESH SPACING OF 6". SECURE TOP OF GEOTEXTILE FABRIC TO TOP OF FENCE WITH STAPLES OR WIRE RINGS AT 12" C-C.

7. GEOTEXTILE FABRIC SHALL BE REINFORCED WITH AN INDUSTRIAL POLYPROPYLENE NETTING WITH A MAXIMUM MESH SPACING OF 1/4" OR EQUAL. A HEAVY DUTY NYLON TOP SUPPORT CORD OR EQUIVALENT IS REQUIRED.

8. STEEL POSTS SHALL BE STUDDED "TEE" OR "U" TYPE WITH A MINIMUM WEIGHT OF 1.2 LBS/LINEAR FOOT WITHOUT ANCHORS, OR ANCHORS SUFFICIENT TO RESIST POST MOVEMENT ARE REQUIRED. WOOD POSTS SHALL BE A MINIMUM SIZE OF 4" DIAMETER, OR 2 1/2" X 3 1/2", EXCEPT WOOD POSTS FOR GEOTEXTILE FABRIC REINFORCED WITH NETTING SHALL BE A MINIMUM SIZE OF 1 1/8" X 1 1/8" OAK OR HICKORY.

9. ALTERNATES A AND B ARE EQUAL AND EITHER MAY BE USED.

SILT FENCE (WDNR TECHNICAL STANDARD 1056)

EROSION CONTROL NOTES

1. THESE EROSION CONTROL DRAWINGS HAVE BEEN REVIEWED AND APPROVED BY THE WISCONSIN DEPARTMENT OF NATURAL RESOURCES. ANY PROPOSED CHANGES TO THESE DRAWINGS SHALL BE SUBMITTED TO WDNR (ATTN: PETER WOOD) FOR REVIEW AT LEAST 5 WORKING DAYS PRIOR TO FIELD IMPLEMENTATION.

2. CONTRACTOR SHALL REVIEW EROSION CONTROL PLAN AND SUPPLEMENT IT WITH ADDITIONAL EROSION CONTROL PROVISIONS AND BEST MANAGEMENT PRACTICES AS NECESSARY.

3. THE CONTRACTOR SHALL BE RESPONSIBLE FOR PREPARING AN EROSION CONTROL IMPLEMENTATION PLAN (ECIP) FOR THE OVERALL CONSTRUCTION SITE. ECIP SHALL BE SUBMITTED FOR REVIEW PRIOR TO CONSTRUCTION. ALL EROSION CONTROL PROVISIONS SHALL COMPLY WITH WDNR TECHNICAL STANDARDS.

3. WDNR TECHNICAL STANDARDS SHALL BE REVIEWED AND FOLLOWED FOR EROSION CONTROL PRACTICES SUCH AS DUST CONTROL (WDNR TECHNICAL STANDARD 1068), DEWATERING (WDNR TECHNICAL STANDARD 1061), MULCHING (WDNR TECHNICAL STANDARD 1058), OR OTHER STANDARD PRACTICES AS NEEDED.

4. STONE TRACKING PADS SHALL BE THE FULL WIDTH OF THE EGRESS POINT, A MINIMUM OF 50-FEET LONG AND 12-INCH DEPTH (3"-6" CLEAR STONE). STONE TRACKING PADS SHALL BE PLACED IN LOCATIONS AS REQUIRED. WDNR TECHNICAL STANDARD 1057 SHALL BE FOLLOWED FOR THE MAINTENANCE OF THE STONE TRACKING PADS.

5. FOR ALL DEWATERING OPERATIONS, CONTRACTOR SHALL COMPLY WITH WDNR TECHNICAL STANDARD 1061. AT A MINIMUM, DEWATERING SYSTEM SHALL CONSIST OF A PORTABLE SEDIMENTATION TANK FOLLOWED BY GEOTEXTILE BAGS. GEOTEXTILE BAGS SHALL BE LINED WITH STRAW/HAY BALES. SUPPLEMENT DEWATERING SYSTEM WITH POLYMER IF NECESSARY. DISCHARGE FROM GEOTEXTILE BAGS SHALL BE ONTO ESTABLISHED TURF (VEGETATED BUFFER) AREA PRIOR TO DEWATERING THE STREAM. CONTRACTOR SHALL BE RESPONSIBLE FOR OBTAINING WDNR APPROVAL OF DEWATERING SYSTEM.

6. ANY SOIL STOCKPILED THAT REMAINS FOR MORE THAN 7 DAYS SHALL BE COVERED OR TREATED WITH STABILIZATION PRACTICES SUCH AS TEMPORARY OR PERMANENT SEEDING AND MULCHING.

7. A MINIMUM OF 6 INCHES OF TOPSOIL MUST BE APPLIED TO ALL AREAS TO BE SEEDED.

8. ALL MULCH SHALL BE ANCHORED (CRIMPED) IN PLACE.

9. ALL WASTE AND UNUSED CONSTRUCTION MATERIALS (INCLUDING GARBAGE, DEBRIS, CLEANING WASTES, WASTEWATER, TOXIC MATERIALS, OR HAZARDOUS MATERIALS) SHALL BE PROPERLY DISPOSED OF AND NOT ALLOWED TO BE CARRIED OFF-SITE BY RUNOFF OR WIND.

10. ALL OFF-SITE SEDIMENT DEPOSITS OCCURRING AS A RESULT OF CONSTRUCTION WORK OR A STORM EVENT SHALL BE CLEANED UP BY THE END OF EACH DAY. FLUSHING SHALL NOT BE ALLOWED.

11. ANY SOIL EROSION THAT OCCURS AFTER FINAL GRADING AND/OR THE APPLICATION OF STABILIZATION MEASURES MUST BE REPAIRED AND THE WORK REDONE.

12. FOR ANY DISTURBED AREA THAT REMAINS INACTIVE FOR GREATER THAN 7 WORKING DAYS, OR WHERE GRADING WORK EXTENDS BEYOND THE PERMANENT SEEDING DEADLINES, THE SITE MUST BE TREATED WITH TEMPORARY STABILIZATION MEASURES SUCH AS SOIL TREATMENT, TEMPORARY SEEDING AND/OR MULCHING. TEMPORARY STABILIZATION AFTER OCTOBER 1, SHALL INCLUDE USE OF TYPE B SOIL STABILIZER IN ACCORDANCE WITH WDNR CONSERVATION STANDARD, CODE 1050.

13. ALL TEMPORARY EROSION CONTROL PRACTICES SHALL BE MAINTAINED UNTIL THE SITE IS STABILIZED WITH 70% VEGETATION AND A NOTICE OF TERMINATION HAS BEEN APPROVED BY THE WDNR.

14. WIND EROSION SHALL BE KEPT TO A MINIMUM DURING CONSTRUCTION. WATERING, MULCH OR A TACKING AGENT MAY NEED TO BE UTILIZED TO PROTECT NEARBY RESIDENCES/WATER RESOURCES.

15. THE CONTRACTOR SHALL BE RESPONSIBLE FOR MAINTAINING ALL THE EROSION CONTROL MEASURES IN CONFORMANCE WITH THE WDNR CONSERVATION PRACTICE STANDARDS, LATEST EDITION.

16. FINE SEDIMENT ACCUMULATIONS SHALL BE CLEANED FROM STREETS, PRIVATE DRIVES, OR PARKING AREAS BY MANUAL OR MECHANICAL SWEEPING A MINIMUM OF ONCE PER WEEK AND BEFORE ALL IMMINENT RAINS.

17. EROSION AND SEDIMENT CONTROL STRUCTURES SHALL BE INSPECTED WEEKLY, WITHIN 24 HOURS OF RAINFALL OF 0.5 INCH OR MORE, AND BEFORE IMMINENT/FORECASTED PRECIPITATION.

18. WHERE POSSIBLE CONTRACTOR SHALL PLACE ACTIVE/TEMPORARY SPOIL PILES UPSTREAM OF EXCAVATED TRENCHES.

19. DISTURBED DITCH AREAS AND AREAS WITH SIDE SLOPES STEEPER THAN 4:1 REQUIRE E-MAT (TYPE 1, CLASS B). UNLESS OTHERWISE NOTED.

20. DISTURBED AREAS SHALL BE UNIFORMLY GRADED PRIOR TO RESTORATION (SEEDING, EROSION MAT PLACEMENT, AND/OR MULCHING).

21. PLACE CLEAR STONE CHECK DAM IN EXISTING DITCH LINE AT APPROXIMATELY 50-FT INTERVALS AFTER ANY LAND DISTURBANCE. CHECK DAMS SHALL BE APPROXIMATELY 9-INCHES IN HEIGHT AND 12-FT IN LENGTH.

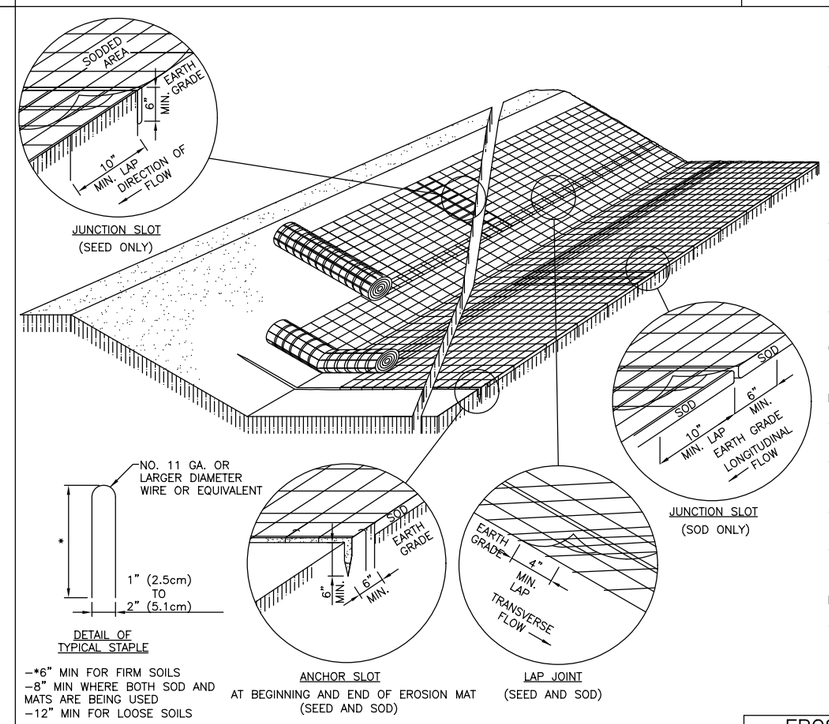

-*6" MIN FOR FIRM SOILS
-8" MIN WHERE BOTH SOD AND MATS ARE BEING USED
-12" MIN FOR LOOSE SOILS

ANCHOR SLOT
AT BEGINNING AND END OF EROSION MAT (SEED AND SOD)

DETAIL NOTES:
1. DETAILS OF CONSTRUCTION, MATERIALS AND WORKMANSHIP NOT SHOWN ON THIS DRAWING SHALL CONFORM TO THE PERTINENT REQUIREMENTS OF THE STANDARD SPECIFICATIONS AND THE APPLICABLE SPECIAL PROVISIONS.
2. VARIATIONS IN THE DIMENSIONS OR MATERIALS SHOWN HEREON SHALL BE PERMITTED IF THEY PROVIDE EQUIVALENT PROTECTION AND MATERIAL STRENGTH.
3. LAP JOINTS SHALL NOT BE PLACED IN THE BOTTOM OF V-SHAPED DITCHES.
4. JUNCTION SLOTS ON ADJACENT STRIPS OF MATTING SHALL BE STAGGERED A MINIMUM OF 4 FEET APART.
5. EDGES OF THE EROSION MAT SHALL BE IMPRESSED IN THE SOIL.
6. EROSION MAT SHALL BE MEASURED AND PAID FOR IN ACCORDANCE WITH THE STANDARD SPECIFICATIONS.

EROSION MAT OVER SOD
- ONLY JUTE FABRIC WILL BE PERMITTED OVER SOD.
- FLOOD STAKES FOR SOD MAY BE OMITTED IF THE EXISTING SLOPE AND SOIL CONDITIONS SO PERMIT.
- THE WIDTH OF EROSION MAT SHALL ALWAYS EQUAL THE SOD WIDTH.
- SOD STRIPS MAY BE PLACED EITHER LONGITUDINALLY OR TRANSVERSELY TO THE FLOW LINE OF THE DITCH.

EROSION MAT OVER SEEDING
- JUNCTION OR ANCHOR SLOTS SHALL BE AT MINIMUM INTERVALS OF 100 FEET ON GRADES UP TO AND INCLUDING 3 PERCENT, AND 50 FEET ON GRADES EXCEEDING 3 PERCENT.

EROSION CONTROL MAT INSTALLATION (WDNR TECHNICAL STANDARD 1052)

NO.	REVISIONS	DATE:

EROSION CONTROL NOTES AND DETAILS

ROTARY PARK IMPROVEMENTS
CITY OF STOUGHTON
DANE COUNTY, WISCONSIN

JOB NO. 1040.128
PROJECT MGR. ABC

STRAND ASSOCIATES®

SHEET 3

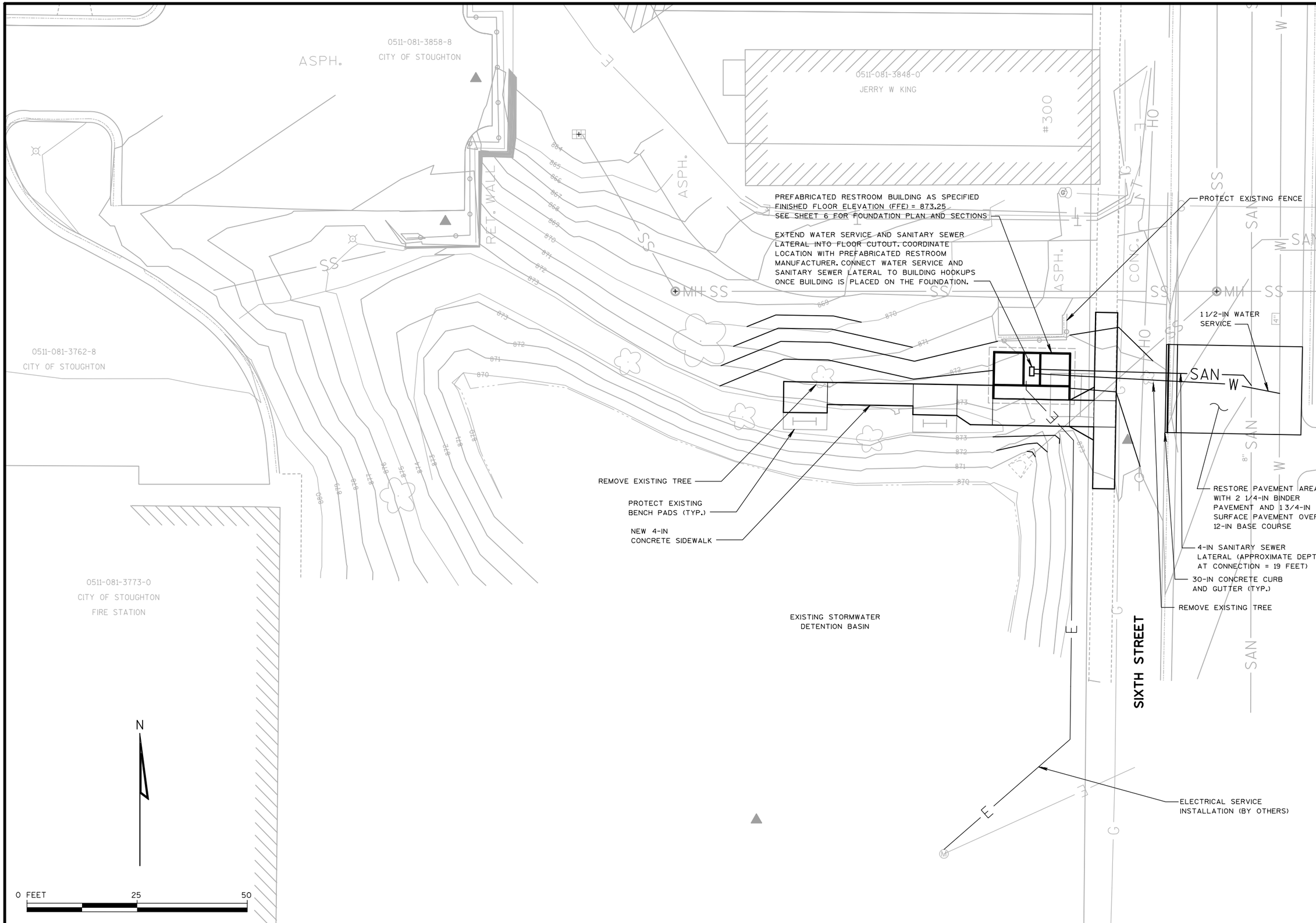

NO.	REVISIONS	DATE:

SITE AND UTILITY PLAN - BASE BID

ROTARY PARK IMPROVEMENTS
CITY OF STOUGHTON
DANE COUNTY, WISCONSIN

JOB NO. 1040.128

PROJECT MGR. ABC

STRAND ASSOCIATES®

SHEET 4

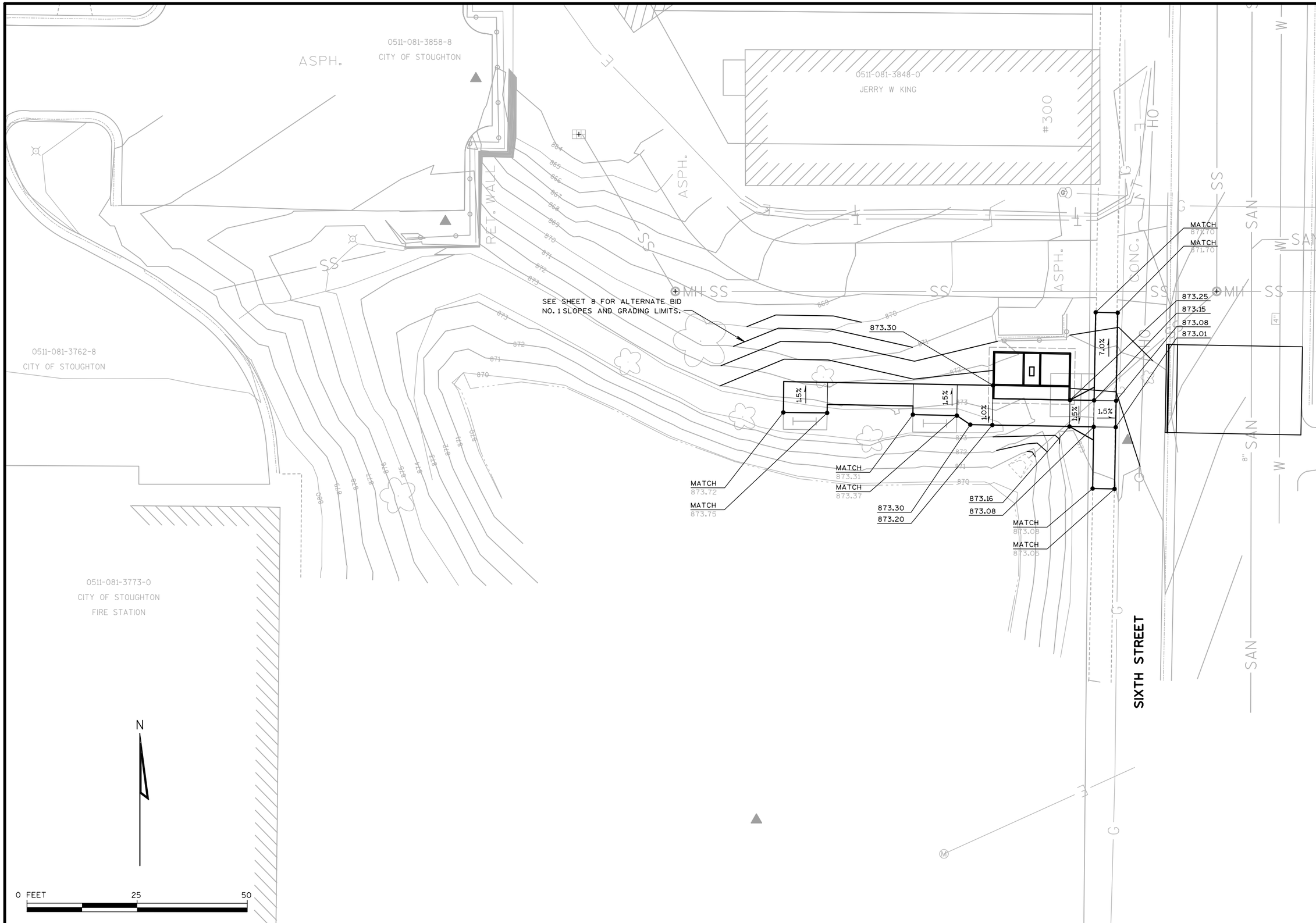

NO.	REVISIONS	DATE:

GRADING PLAN - BASE BID

ROTARY PARK IMPROVEMENTS
CITY OF STOUGHTON
DANE COUNTY, WISCONSIN

JOB NO.
1040.128

PROJECT MGR.
ABC

STRAND ASSOCIATES®

SHEET
5

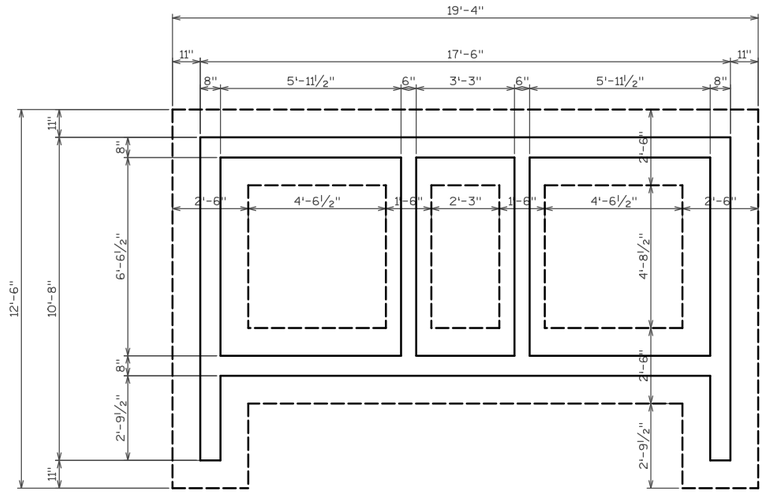

FOOTING LAYOUT

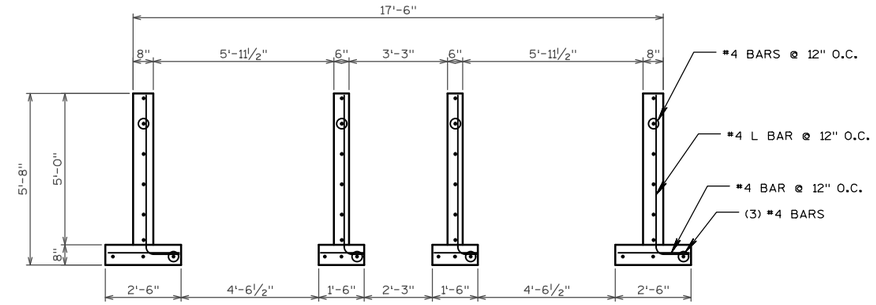

SECTION THRU FOOTINGS

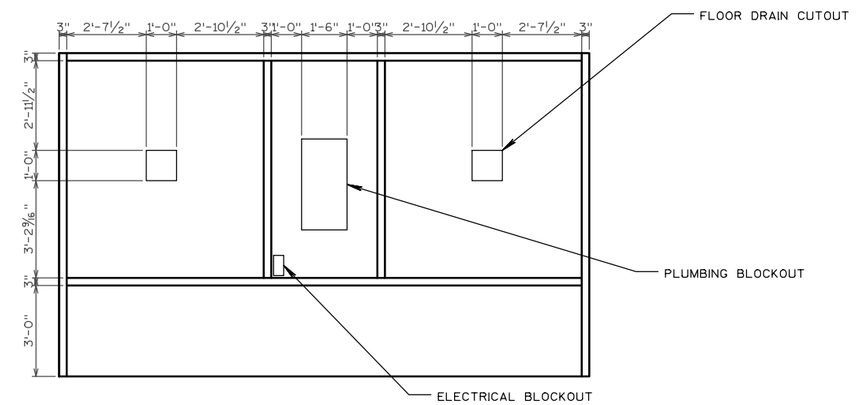

PRECAST RESTROOM FLOOR SLAB

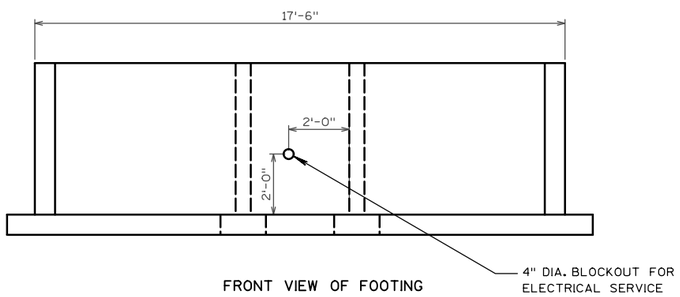

FRONT VIEW OF FOOTING

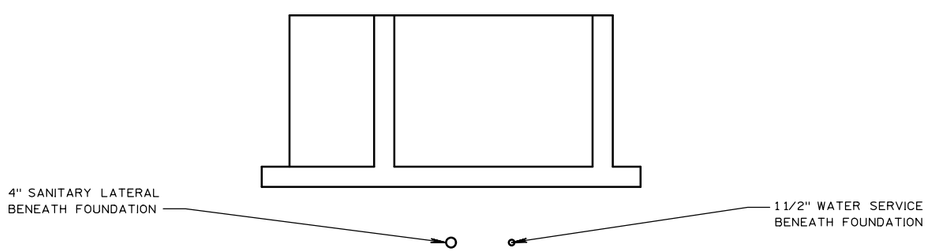

RIGHT VIEW OF FOOTING

NO.	REVISIONS	DATE:

FOUNDATION AND SLAB PLAN AND SECTIONS

ROTARY PARK IMPROVEMENTS
CITY OF STOUGHTON
DANE COUNTY, WISCONSIN

JOB NO.
1040.128

PROJECT MGR.
ABC

STRAND ASSOCIATES®

SHEET
6

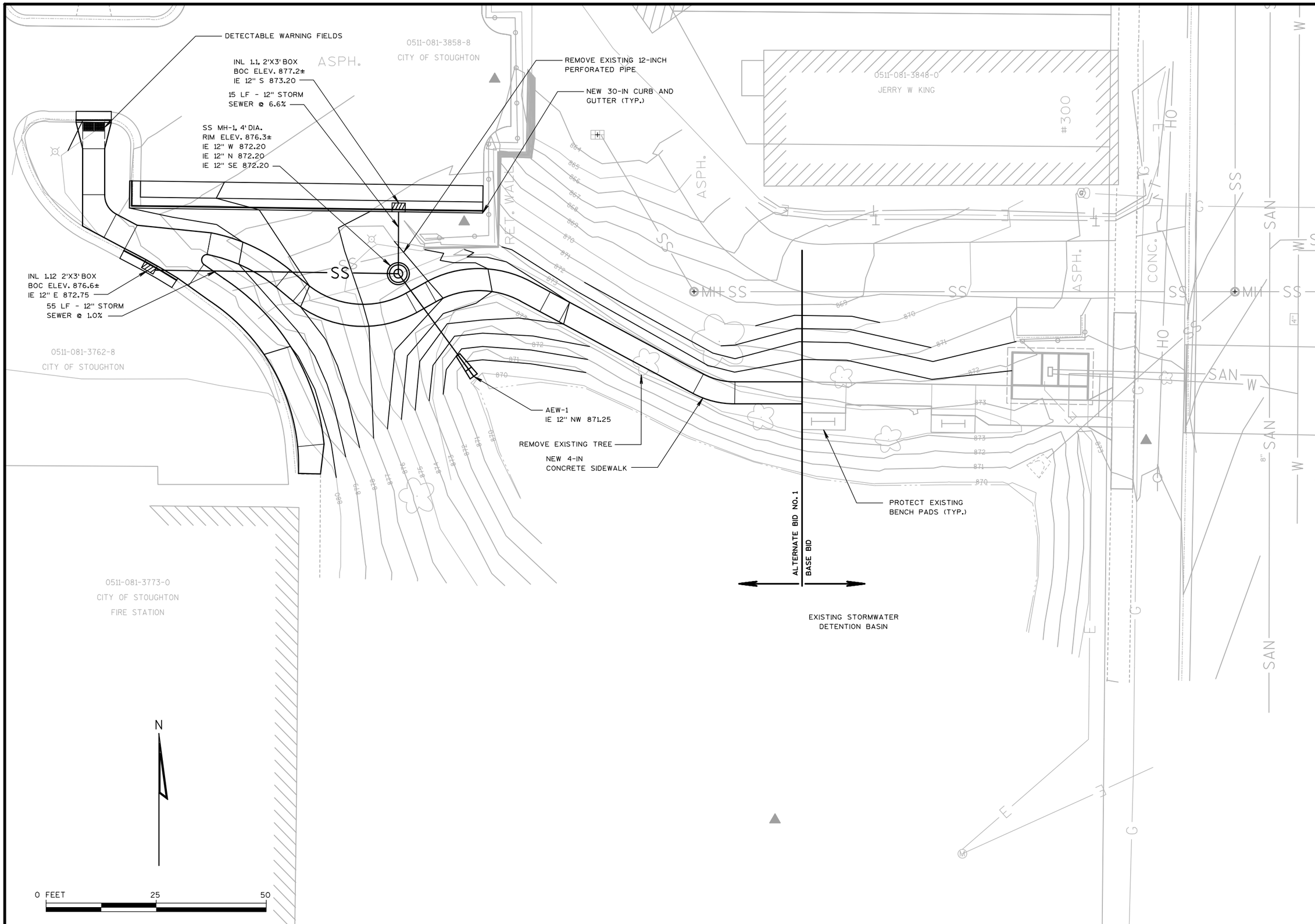

NO.	REVISIONS	DATE:

SITE AND UTILTIY PLAN - ALTERNATIVE BID NO. 1

ROTARY PARK IMPROVEMENTS
CITY OF STOUGHTON
DANE COUNTY, WISCONSIN

JOB NO.
1040.128

PROJECT MGR.
ABC

STRAND ASSOCIATES®

SHEET
7

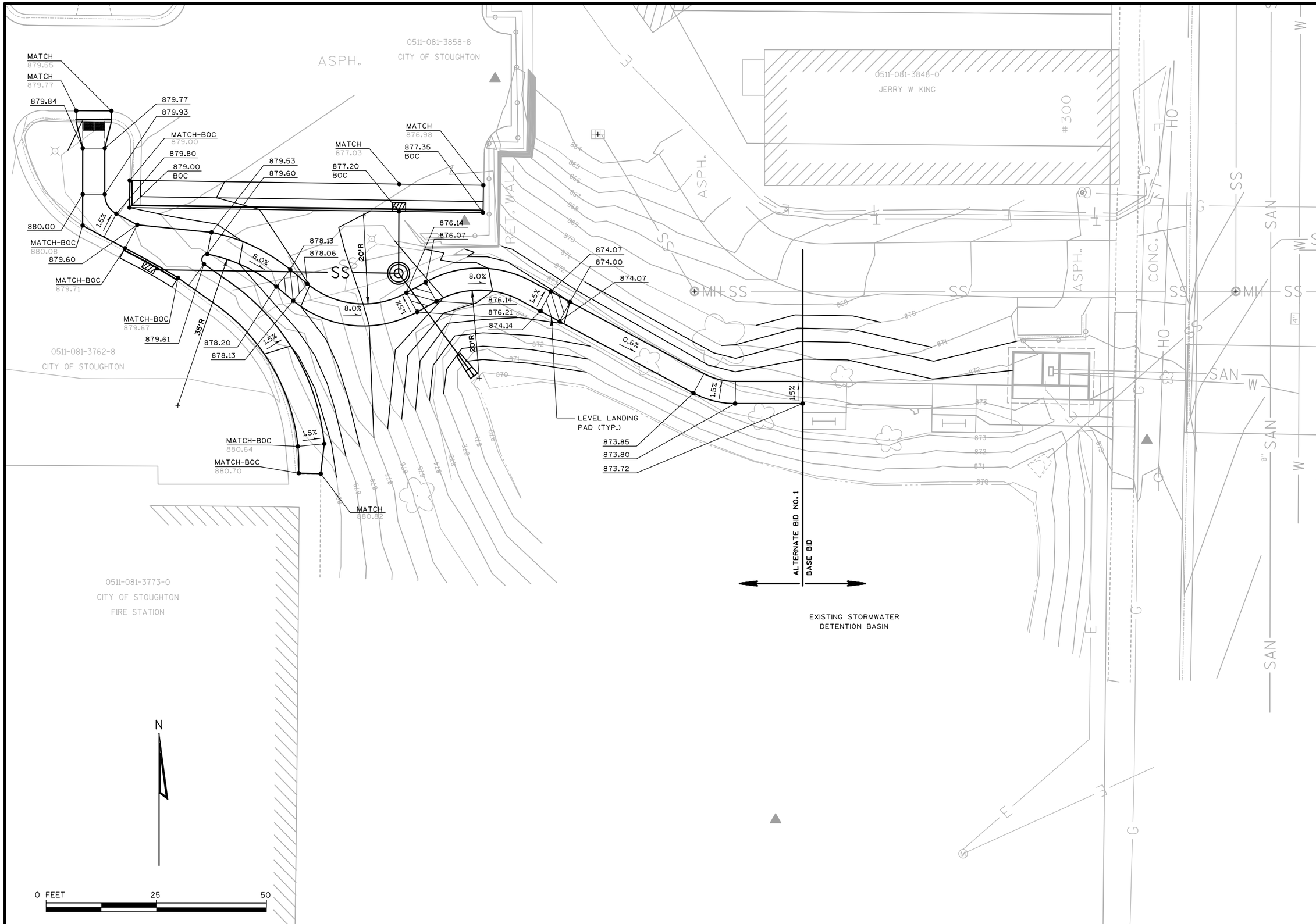

NO.	REVISIONS	DATE:

SITE AND UTILTIY PLAN - ALTERNATIVE BID NO. 1

ROTARY PARK IMPROVEMENTS
CITY OF STOUGHTON
DANE COUNTY, WISCONSIN

JOB NO.
1040.128

PROJECT MGR.
ABC

STRAND ASSOCIATES®

SHEET
8