City of Stoughton Certificate of Appropriateness

Application Form

1. **Name of Property**: McGlynn Pharmacy Building

   Address of Property: 100 E Main and 219 Division St

   Name of historic district in which property is located: Downtown

2. **Owner & Applicant Information**

   Owner Name: Asgard Holdings LLC c/o Phillip Knutson

   Street Address: 4422 Catalina Pkwy, ~~McFarland WI 5355~~8

   City: McFarland State: WI Zip: 53558

   Daytime Phone, including Area Code: 608-320-9633

   Applicant (if different from owner): —

   Applicant's Daytime Phone, including Area Code: —

3. **Attachments.** The following information is enclosed:

   X Photographs
   X Sketches, elevation drawings
   X Plan drawings
   _____ Site plan showing relative location of adjoining buildings, if located within a Historic
   _____ Specifications
   _____ Other (describe)

4. **Description of Proposed Project** (on next pages)

5. **Signature of Applicant** [signature] Date: 9/28/22

Return To: Zoning Administrator, Stoughton City Hall, 207 S Forrest Street
mstacey@ci.stoughton.wi.us

Description of Proposed Project

(attach additional sheets as necessary)

Architectural Feature: Windows

Approximate date of feature: Oct 2022

Describe existing feature: 3 current windows have rotted wood. 1 window is currently fiberglass and needs glass

Describe proposed work, materials to be used and impact to existing feature:
see attached proposal descriptions from City Glass for details on all windows

Photograph No. _____ **Drawing No.** _____

Architectural Feature: _____

Approximate date of feature: _____

Describe existing feature:

Describe proposed work, materials to be used and impact to existing feature:

Photograph No. _____ **Drawing No.** _____

Architectural Feature: _____

Approximate date of feature: _____

Describe existing feature:

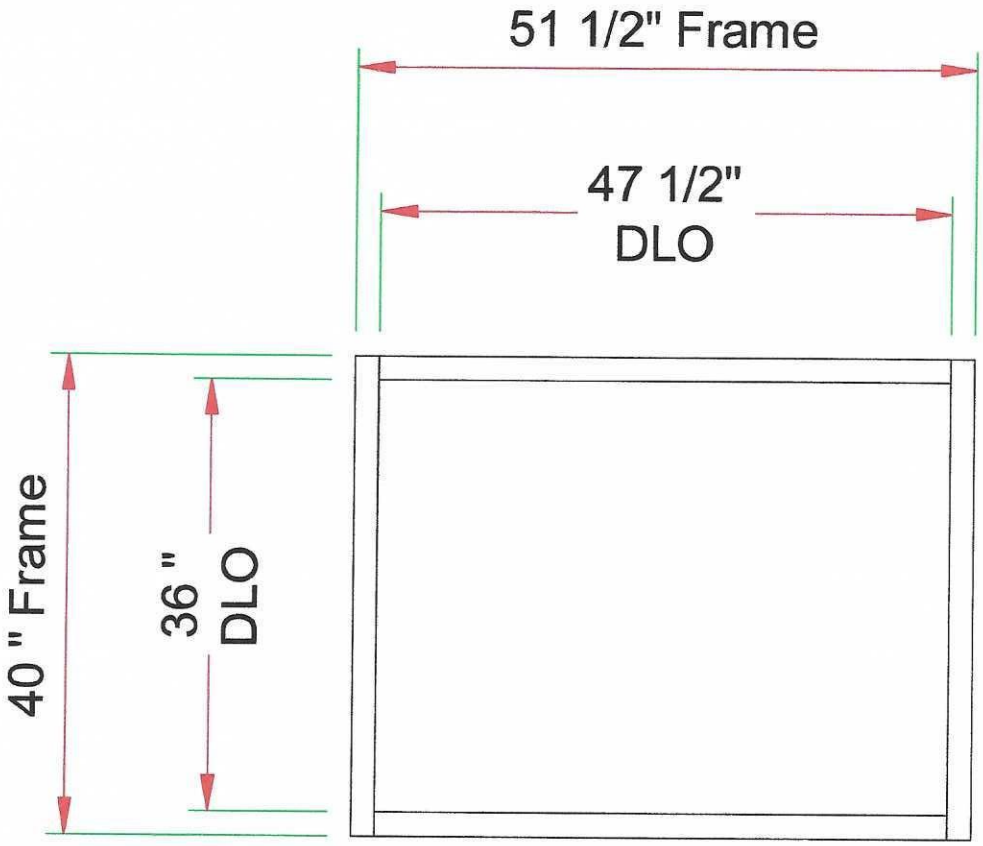

Asgard Holdings - Division St. small fixed window (1 Thus)
Frame: (C1/DB/1P) E14000 : Storefront : 2 x 4-1/2 : Flush Glaze : Screw Spline : E14059 Subsill
9/22/2022

Gmail

Ken Muth <cityglassken@gmail.com>

Stoughton project for Asgard holdings/ Knutson

2 messages

Phillip Knutson <asgardholdingsllcstoughton@gmail.com>
To: "cityglassken@gmail.com" <cityglassken@gmail.com>

Wed, Sep 21, 2022 at 4:17 PM

Hi Ken

Width is 36"
Height is 93.5"

On Tue, Sep 20, 2022 at 12:58 PM Phillip Knutson <asgardholdingsllcstoughton@gmail.com> wrote:
Phillip Knutson
Cell: 608-320-9633

cityglassken <cityglassken@gmail.com>
To: Phillip Knutson <asgardholdingsllcstoughton@gmail.com>

Wed, Sep 21, 2022 at 6:41 PM

Good thanks

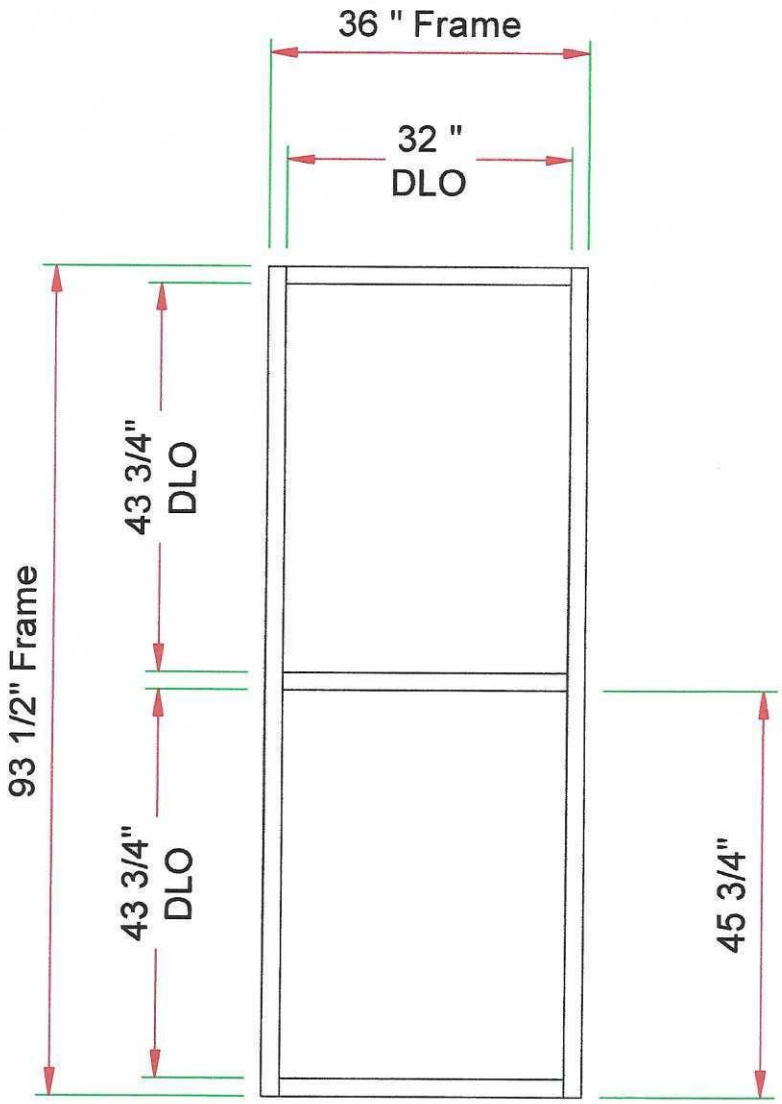

Asgard Holdings - Division St. fixed double hung (1 Thus)
Frame: (C1/DB/1P) E14000 : Storefront : 2 x 4-1/2 : Flush Glaze : Screw Spline : E14059 Subsill
9/22/2022

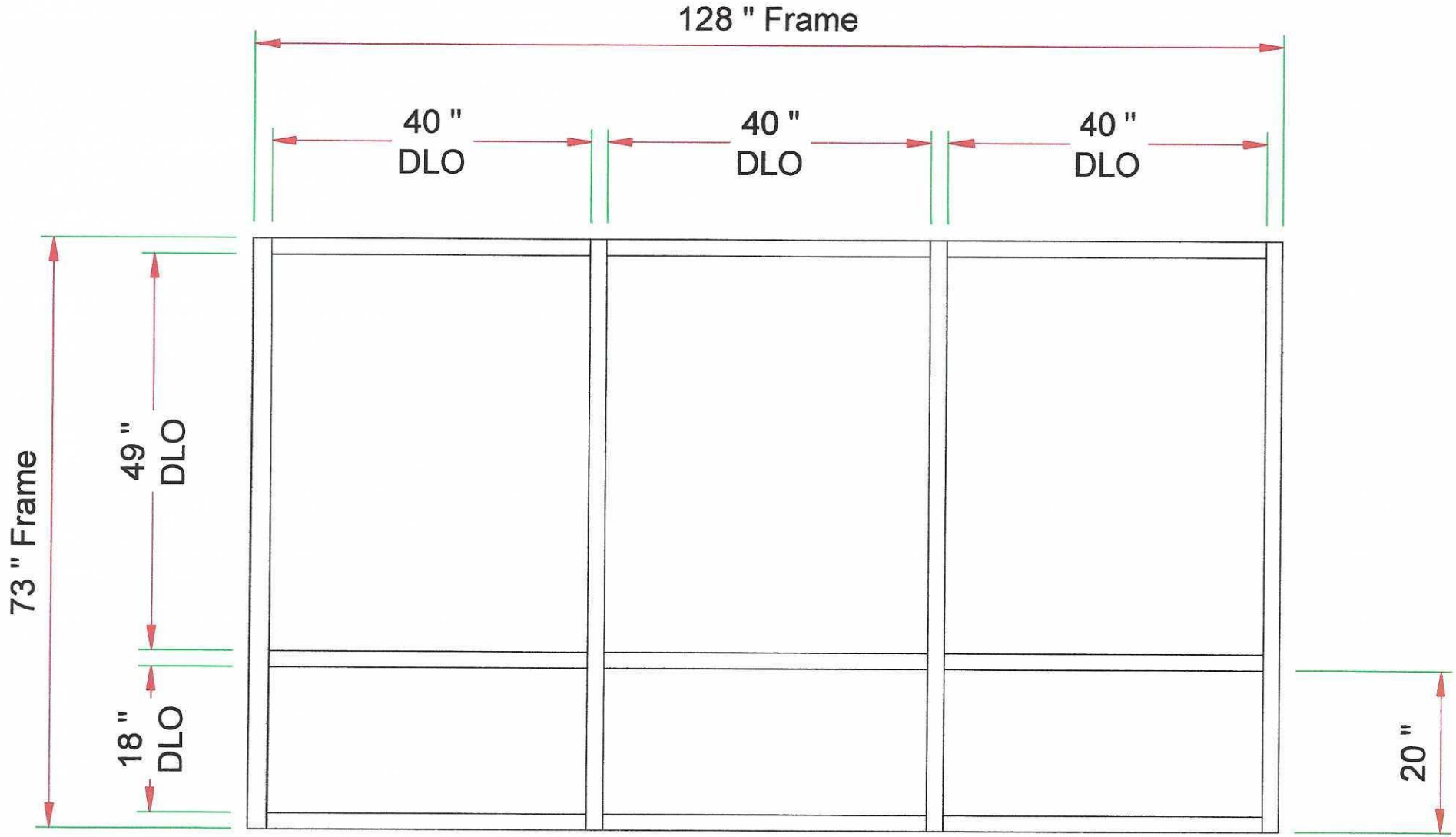

Asgard Holdings - Division St. large (3 wide) window (1 Thus)
Frame: (C1/DB/1P) E14000 : Storefront : 2 x 4-1/2 : Flush Glaze : Screw Spline : E14059
Subsill
9/22/2022

HARMA