POST TOP RETROFITS DLC QUALIFIED PRODUCTS LISTING

120-277V	EX39 MOGUL	ULTYPE B BALLAST BYPASS	-40°–122°F		10kA	80+	L70 >50,000	5 YEAR WARRANTY
VOLTAGE**	BASE TYPE	INSTALL METHOD	OPERATING TEMP	ACTIVE COOLING	SURGE PROTECTION	CRI	RATED LIFE	WARRANTY

pinpoint light distribution

designed from the base up with DLC qualifications in mind

- 30W, 45W and 65W models replacing up to 320W HID
- 360° light distribution with angled LED panels deliver light where it is needed most
- Includes a fan and thermal sensor to run cool and ensure a long and bright life
- Rated for enclosed fixtures and damp locations with an insect and dust resistant housing
- USA designed and specified driver
- Available in 3000, 4000 and 5000K*

PART #	UPC	REPLACES	WATTAGE	LUMENS	CCT (K)*	BASE	DLC PRODUCT CODE
LED-8144M50-A	844006083205	Up to 175W	30W	4350	5000K	EX39	PABECGKY
LED-8145M50-A	844006083045	Up to 250W	45W	6525	5000K	EX39	PPWI1H3Z
LED-8146M50-A	844006083106	Up to 320W	65W	9425	5000K	EX39	P9SCIPNG

* See page 2 for additional color temperatures.

** See page 2 for 347 volt options for Canada.

Light Efficient Design

RemPhos

FOR PRODUCT INFO ("LED" MODEL #) CONTACT.....Light Efficient Design • 188 S. Northwest Highway • Cary, IL 60013 • 847.380.3540 • led-llc.com
FOR PRODUCT INFO ("RP" MODEL #) CONTACT.....RemPhos by Light Efficient Design • 30 Log Bridge Road, Building 200 • Middleton, MA 01949 • 877.997.3674 • remphos.com

10.23.18 Information is subject to change without notice.

POST TOP RETROFITS DLC QUALIFIED PRODUCTS LISTING

LED-8144M50-A
LED-8145M50-A
LED-8146M50-A

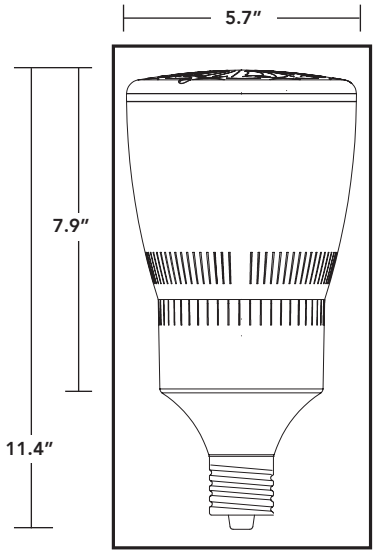

ORDERING GUIDE

PART #	UPC	REPLACES	WATTAGE	LUMENS	CCT (K)	BASE	DLC PRODUCT CODE
LED-8144M30-A	844006083182	Up to 175W HID	30W	4050	3000K	EX39	PYCD9P94
LED-8144M40-A	844006083199	Up to 175W HID	30W	4350	4000K	EX39	PG5CIG3I
LED-8144M50-A	844006083205	Up to 175W HID	30W	4350	5000K	EX39	PABECGKY
LED-8145M30-A	844006083021	Up to 250W HID	45W	6075	3000K	EX39	PDDM9MKE
LED-8145M40-A	844006083038	Up to 250W HID	45W	6525	4000K	EX39	P2CZ4A2G
LED-8145M50-A	844006083045	Up to 250W HID	45W	6525	5000K	EX39	PPWI1H3Z
LED-8146M30-A	844006083083	Up to 320W HID	65W	8775	3000K	EX39	PELYMZBB
LED-8146M40-A	844006083090	Up to 320W HID	65W	9425	4000K	EX39	PDKH4UY8
LED-8146M50-A	844006083106	Up to 320W HID	65W	9425	5000K	EX39	P9SCIPNG

347 VOLT OPTIONS FOR CANADA

PART #	UPC	REPLACES	WATTAGE	LUMENS	CCT (K)	BASE	DLC PRODUCT CODE
LED-8144M30C-A	844006083212	Up to 175W HID	30W	4050	3000K	EX39	P3UFXV1M
LED-8144M40C-A	844006083229	Up to 175W HID	30W	4350	4000K	EX39	PQ0E1A04
LED-8144M50C-A	844006083236	Up to 175W HID	30W	4350	5000K	EX39	PSHCOZ6Z
LED-8145M30C-A	844006083052	Up to 250W HID	45W	6075	3000K	EX39	P0THH81G
LED-8145M40C-A	844006083069	Up to 250W HID	45W	6525	4000K	EX39	PWEVL575
LED-8145M50C-A	844006083076	Up to 250W HID	45W	6525	5000K	EX39	P948P0QZ
LED-8146M30C-A	844006083113	Up to 320W HID	65W	8775	3000K	EX39	PGF1448Y
LED-8146M40C-A	844006083120	Up to 320W HID	65W	9425	4000K	EX39	PX2M2R6J
LED-8146M50C-A	844006083137	Up to 320W HID	65W	9425	5000K	EX39	PMY7278I

Light Efficient Design

RemPhos

FOR PRODUCT INFO ("LED" MODEL #) CONTACT.....Light Efficient Design • 188 S. Northwest Highway • Cary, IL 60013 • 847.380.3540 • led-llc.com
FOR PRODUCT INFO ("RP" MODEL #) CONTACT.....RemPhos by Light Efficient Design • 30 Log Bridge Road, Building 200 • Middleton, MA 01949 • 877.997.3674 • remphos.com

10.23.18 Information is subject to change without notice.