CITY OF STOUGHTON
DEPARTMENT OF
PLANNING & DEVELOPMENT
381 East Main Street, Stoughton, WI. 53589

(608) 873-6619 www.ci.stoughton.wi.us

RODNEY J. SCHEEL
DIRECTOR

Date: April 29, 2020

To: Plan Commissioners

From: Rodney J. Scheel
Director of Planning & Development

Michael P. Stacey
Zoning Administrator/Assistant Planner

Subject: Agenda Item for the May 11, 2020 Plan Commission Meeting

Request by Edward and Patricia Bierer of Stellar Services for approval of a building addition at 301 Business Park Circle.

This request is for approval of a building addition at 301 Business Park Circle for a business expansion. The Business Park North Committee will be meeting prior to this meeting and provide a recommendation related to the BPN Covenant requirements. The resolution, application information, and staff review letter are provided. Site plan approval by the Plan Commission is all that is necessary. Staff recommends approval contingent on the staff review letter.

CITY OF STOUGHTON, 207 S. FORREST STREET, STOUGHTON, WISCONSIN

RESOLUTION OF THE PLAN COMMISSION

Approving a site plan for a building addition at Stellar Services, 301 Business Park Circle, Stoughton, WI.

Committee Action: Plan Commission approves the request – 0

Fiscal Impact:

File Number:	R - 10 - 2020	**Date Introduced:**	May 11, 2020

RECITALS

A. Stellar Services (the "Applicant") is seeking approval for site plan approval for a building addition at 301 Business Park Circle in the City of Stoughton, Dane County, Wisconsin (the "Property").

B. The Property is zoned Planned Industrial which is consistent with the Comprehensive Plan.

C. The City Plan Commission reviewed and discussed the proposed site plan at their regular May 11, 2020 meeting and found that the plan meets the intent of the zoning ordinance and Comprehensive Plan.

RESOLUTION

BE IT RESOLVED, the City of Stoughton Plan Commission approves the site plan for a building addition at 301 Business Park Circle, Stoughton, WI, with the following conditions:

- Staff review letter dated April 29, 2020

_____

Mayor Tim Swadley Date
Plan Commission Chair

STELLAR SERVICES, LLC
301 BUSINESS PARK CIRCLE • STOUGHTON, WI 53589
PHONE: 608.877.1525 • FAX: 608.877.1527 • TOLL FREE: 866.320.4200

April 14, 2020

City of Stoughton
Laurie Sullivan – Finance Director
381 E. Main Street
Stoughton, WI 53589

Proposed expansion of warehouse space for Stellar Services, LLC

Stellar Services, LLC is a major supplier of Inmate Banking Software and Commissary Services throughout the Midwest. We currently are servicing over 170 County Jails in 9 different states. Our office in the Stoughton Business Park North is our only facility that provides all of these services.

We currently provide 48 full time positions in our facility along with 8 part time positions. We also provide a number of jobs with the MARC center of Stoughton both at their facility and by providing work within our facility.

Our current building is 28,000 sq. ft. and we are looking to expand our warehousing space by 10,000 sq. ft. This warehousing space will allow us to purchase in larger volumes along with some much needed processing area. This expansion will attach to our current building by attaching to our North wall. The metal work will be done by the same manufacturer so very little difference will be noticeable from the East side of our building.

Heating and cooling of our expansion will be through Geo-Thermal processing and all lighting will be LED so we are maximum efficiency. We will be adding a drive in door on the West side of the building and a couple of service entrances, but our main entrance and parking lots will not change.

We are planning on a continued growth rate, as we have since moving into Stoughton in 2010. This expansion is expected to fulfil our needs for the next 8 to 10 years. We are hoping to have construction completed by the end of the summer in 2020.

Thank you for your consideration.

Sincerely,

Edward Bierer
Owner / President

NARRATIVE FOR STELLAR SERVICES – BUILDING ADDITION

CITY OF STOUGHTON, WISCONSIN

Project/Site Description: The building addition area contains approximately 0.30 acres. Currently the existing property is a 3.70 acre commercial building with parking lot and existing stormwater management.

The site development will include a 10,125 square foot building addition, with some additional pavement.

Erosion Control: We will use standard erosion control practices at the site. These will consist of silt fence, tracking pads, and inlet protection. The site will be seeded and mulched at the completion of grading (see attached Grading and Erosion Control Plan).

Predominant Soil Types: The soil survey map indicates the soils in the vicinity of the site primarily consist of Batavia silt loam (Bb) and Kegonsa silt loam (Ke).

Storm Water Management: Per discussions with the City and County, the original stormwater permit included the building addition so this project will only require an erosion control permit.

Construction Methods: We will use standard construction methods and equipment to develop the site.

We would like to begin operations by April 13, 2020 and should complete construction by September 19, 2020.

The construction sequence is as follow for all the phases:

CONSTRUCTION SEQUENCE

1. Install and maintain the temporary gravel construction entrance/exit's as described in the Dane County Erosion Control and Stormwater Management Manual. Additionally install construction equipment parking areas. Stabilize bare areas immediately with gravel and temporary vegetation as construction takes place. The temporary access point shall be placed in the location shown on the grading and erosion control plan. The entrance/exits will be inspected daily. If the aggregate within the temporary access pads becomes covered with soil or if significant quantities of soil are tracked onto surrounding roadways then additional aggregate will be installed to allow the entrance/exits to function properly.

2. Install erosion and sediment control barriers (silt fence) immediately downslope of areas to be disturbed during construction as shown on the approved grading plan. The barriers must be installed parallel to the site contours to the extent practicable with the ends extended upslope one to two feet to prevent flanking of the runoff. At no time from the start of rough grading until site stabilization shall an unbroken slope exist between disturbed areas and the receiving waters. The Dane County Erosion Control and Stormwater Management Manual will be referenced for the proper installation and maintenance of silt fence and all other erosion control measures on the site.

3. Strip topsoil from the areas of the site that will be graded within 48 hours. Any areas that will not be immediately graded must not be stripped of topsoil until the preceding areas are topsoiled, seeded and mulched. Place soil stockpiles at least 25 feet away from any downslope street, driveway, or ditch. All topsoil piles will have silt fence placed on their downslope sides. Topsoil piles will be seeded with annual rye if they are in place for more than 7 days. Any areas left inactive for more than 7 days will be stabilized immediately with seed and mulch.

4. Grading will be phased to the extent practicable to limit the amount of the exposed soil at any one time and to provide a buffer between the graded areas and the receiving waters. The intent of these grading restrictions is to provide an undisturbed buffer area allowing additional erosion and sedimentation protection during construction.

5. Topsoil, seed and mulch all areas which are at final grade and which will not be disturbed during subsequent phases of construction. Any areas left inactive for more than 7 days must be stabilized immediately.

6. Complete final grading.

7. Within 7 days of the completion of final grading, a minimum of 4 inches of topsoil shall be replaced on all disturbed surfaces that are to be revegetated. Topsoil shall be uniformly placed, graded smooth and scarified for seeding.

8. Fertilize all areas to be seeded or sodded with 500lbs. per acre of 16-8-8 (minimum). Incorporate the fertilizer into the soil by scarifying as indicated above in Item 11. Seed all disturbed areas with the following seeding mixture:

   30.50 lbs/acre of Kentucky Bluegrass
   17.50 lbs/acre of Red Fescue
   17.50 lbs/acre of Hard Fescue
   22.00 lbs/acre of perennial Rye Grass

   The Owner reserves the right to revise the seeding mixture subject to approval by the City of Stoughton.

   Sod may be substituted for seeding on all areas to be seeded and is recommended for all areas with slopes of 5:1 or steeper.

   Mulch all seeded areas with 1.5 tons per acre of clean straw. Straw shall be anchored in place with suitable equipment or staking with twine.

   <u>For areas on which grading is completed after October 15.</u>
   Temporary seed (such as rye or sinter wheat) and mulch must be applied as soon as these areas reach their final grade. Additional erosion control barriers may be needed downslope of these areas until final seeding or sodding is completed in spring (by June 1). Any areas with slopes greater than 6:1 must be seeded and mulched but not topsoiled. Areas with sloped less than 6:1 must be topsoiled, seeded and mulched. All areas must be topsoiled, seeded and mulched as described above in the following spring.

9. Whenever possible, preserve existing trees, shrubs, and other vegetation. To prevent root damage, do not grade, place soil piles, or park vehicles near trees marked for preservation.

10. <u>Silt fence maintenance</u>: Erosion control barriers (Silt fence) must be inspected within 24 hours after each rainfall of 0.5-inches or more, and daily during periods of prolonged rainfall. Repairs or replacement shall be made immediately. Sediment deposits on the upslope side on the silt fences shall be removed when the deposits reach half the height of the silt fence.

11. <u>Gravel tracking pad maintenance</u>: Additional stone is required if existing stone becomes buried or if sediment is not being removed effectively from tires. Sediment that is tracked onto the roadway must be removed immediately. Tracking pads may require periodic cleaning to maintain the effectiveness of the practice, which may include the removal and re-installation of the stone.

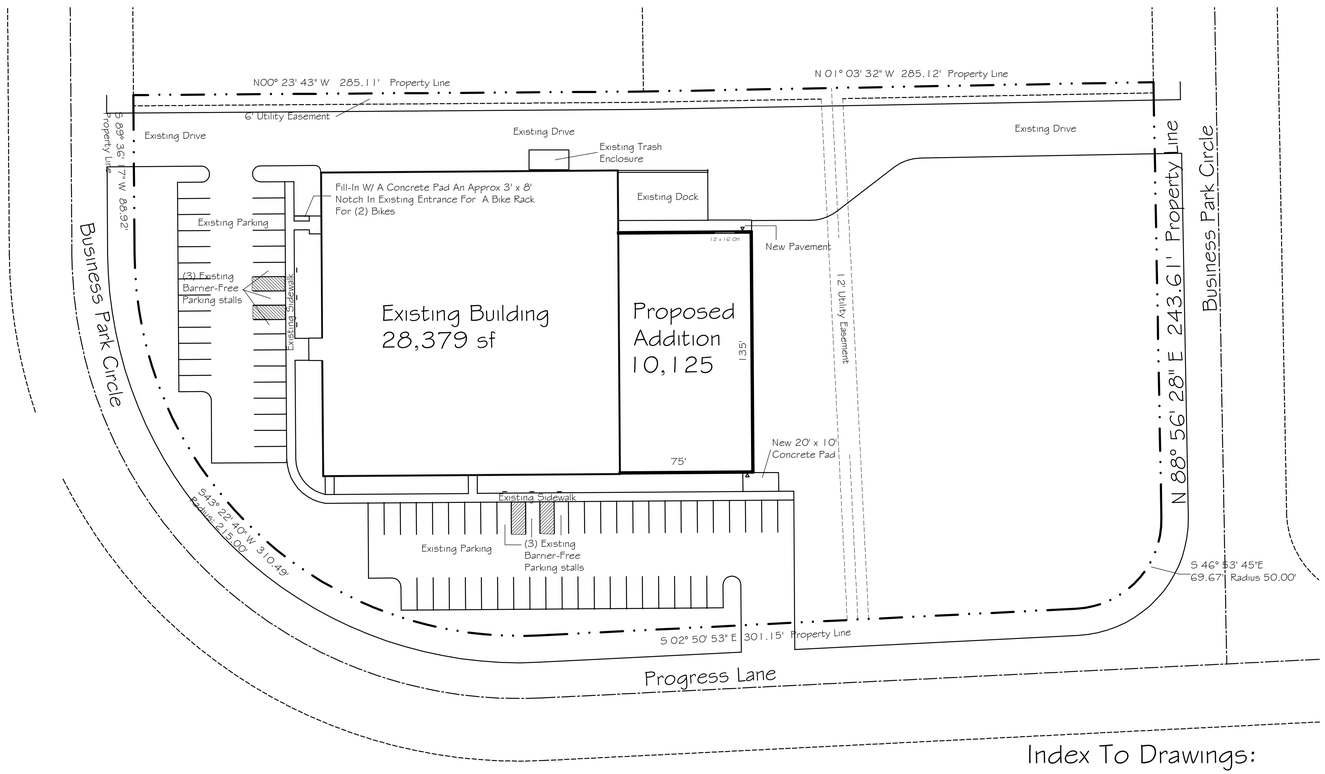

Subject Property

Vicinity Map

Subject Building

Site Map

Index To Drawings:

2.1 Site Plan
2.2 Landscape Plan
3.1 Foundation Plan
3.2 Foundation Details
3.3 Foundation Details
6.1 Floor Plan
7.1 Building Sections
8.1 Exterior Elevations

Site Development Data:

Site Address: 301 Business Park Circle , Stoughton, WI.
Zoning: Planned Industrial
Lot Area: 161,208 sf; 3.7 Acres
Building Area: 38,504 sf
Paved Area: 49,045 sf
Green Space Area: 73,659 sf

Buillding Development Data:

Building Occupancy: S-1 Storage; B, Business (Office)
Building Construction Classification: Type 2B
Building Fully Sprinklered, NFPA 13.
Floor Area Existing Building: 28,379 sf: Addition: 10,125 sf; Total: 38,504 sf.
Building Height: Approx. Nom 20' Eave; Ridge Ht: 27'

0 40' 80'

Site Plan
1" = 40'

NO REPRODUCTION OF THESE PLANS OR THE DESIGNS CONTAINED HEREIN SHALL BE MADE WITHOUT EXPRESS WRITTEN CONSENT OF TRANSCEND ARCHITECTS AND ENGINEERS.

New Addition For:
Stellar Services
301 Business Park Circle
Stoughton, WI 53589

JENNINGS & WOLDT
Kitchen & Bath | Remodeling | Interior Design

Transcend
Architects & Engineers
193 Dewey Street
Sun Prairie, WI 53590
(608) 825-2222 voice
kvilland@gmail.com

PLAN NORTH

Site Plan
1" = 40'

REVISIONS:
Plans As Submitted For Review 4-6-2020
City Staff Comments Revisions Added Landscape Plan 4-20-2020

18 Feb 2020 | 2020-09

2.1

Existing Trash Enclosure

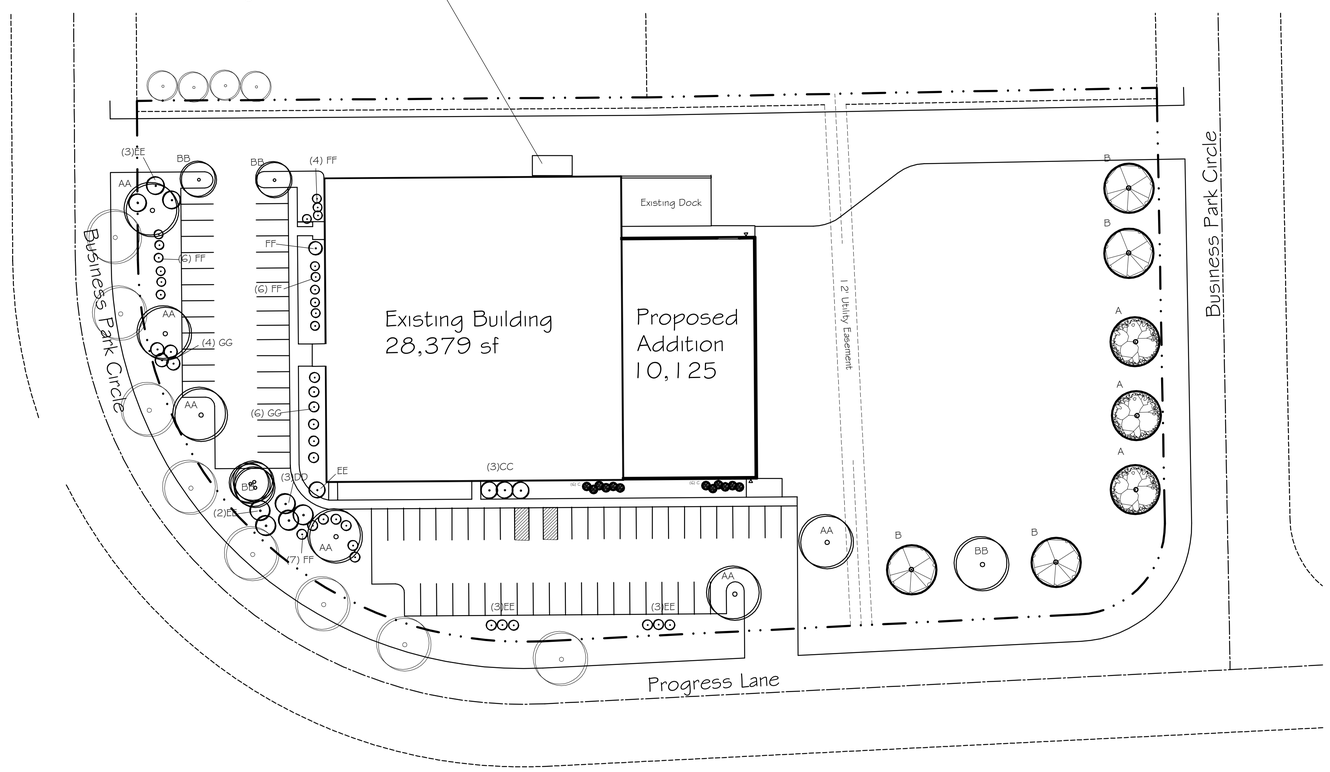

Landscaping Calculations

Foundation Plantings: 40 pts/100lf = 822 lf/100 x 40 = 329 Points

Building Footprint: 1 Pts/1,000sf = 38,345 sf/1,000 x 10 = 384 Points

Paved Area: 60 pts/10,000 or 20 Cars = 47,326 / 10,000 x 60 = 284 Points

Street Frontage: 40 pts/100lf frontage= 1,075 lf/100 x 40= 430 Points

Total Points Required: 1,427 Points

NOTE: TREES PLANTED WITHIN THE PUBLIC RIGHT-OF-WAY AND EASEMENTS SHALL NOT BE PLANTED OVER THE TOP OF ANY UNDERGROUND PUBLIC UTILITIES. TREES SHOULD BE LOCATED NO CLOSER THAN 15 FEET TO THE SANITARY AND WATER LATERALS.

TREES AND OTHER LANDSCAPING SHALL BE ALLOWED IN THE STREET MEDIAN, LOCATED ABOVE THE SEWER MAIN WITH THE UNDERSTANDING THAT IF ACCESS TO THE SEWER MAIN IS NECESSARY FOR MAINTENANCE OR REPAIR AND TREES AND ANY OTHER LANDSCAPING NEEDS TO BE REMOVED TO OBTAIN SUCH ACCESS, THEN REPLACEMENT OF SUCH LANDSCAPING IS NOT THE RESPONSIBILITY OF THE CITY BUT THAT OF THE ADJACENT PROPERTY OWNER.

LANDSCAPING SCHEDULE

Symbol	DESCRIPTION		TYPE	SIZE		QTY	Points	Total Points
AA	Existing Ornan Trees			3-5"		6	75	450
BB	Existing Tall Deciduous Trees			1-8"		4	30	120
CC	Existing Tall Evergreen Trees			5' Tall		3	30	90
DD	Existing Low Evergreen Trees			3' Tall		3	12	36
EE	Existing Tall Deciduous Shrub			3' Tall		12	5	60
FF	Existing Medium Deciduous Shrub			2' Tall		24	3	72
GG	Existing Medium Evergreen Shrub			18" Tall		10	5	50
							Total Existing Points:	878
A	Quercus bicolor "Swamp White Oak"		Ornan	Min. 2.5"	BB	3	75	225
B	Acer Saccharum "Sugar Maple"		Ornan	Min. 2.5"	BB	4	75	300
C	Chicagoland Green Boxwood		SHRUB	18" Tall	3gal cig	12	10	120
							Total New Points:	645
							Total Existing + New Points:	1,523

0 80'
40'

Landscape Plan
1" = 40'

New Addition For:
Stellar Services
301 Business Park Circle
Stoughton, WI 53589

JENNINGS & WOLDT
Kitchen & Bath | Remodeling | Interior Design

Transcend
Architects & Engineers
193 Dewey Street
Sun Prairie, WI 53590
(608) 825-2222 voice
kvilland@gmail.com

PLAN NORTH

Landscape Plan

1" = 40'

REVISIONS:
Plans As Submitted For Review 4-6-2020
City Staff Comments Revisions Added Landscape Plan 4-20-2020

18 Feb 2020 | 2020-09

2.2

NO REPRODUCTION OF THESE PLANS OR THE DESIGNS CONTAINED HEREIN SHALL BE MADE WITHOUT EXPRESS WRITTEN CONSENT OF TRANSCEND ARCHITECTS AND ENGINEERS.

Verify Final Bay And Endwall Spcaing As Well As Anchor Bolt Details With Manufacturer's Final Anchor Bolt Plan

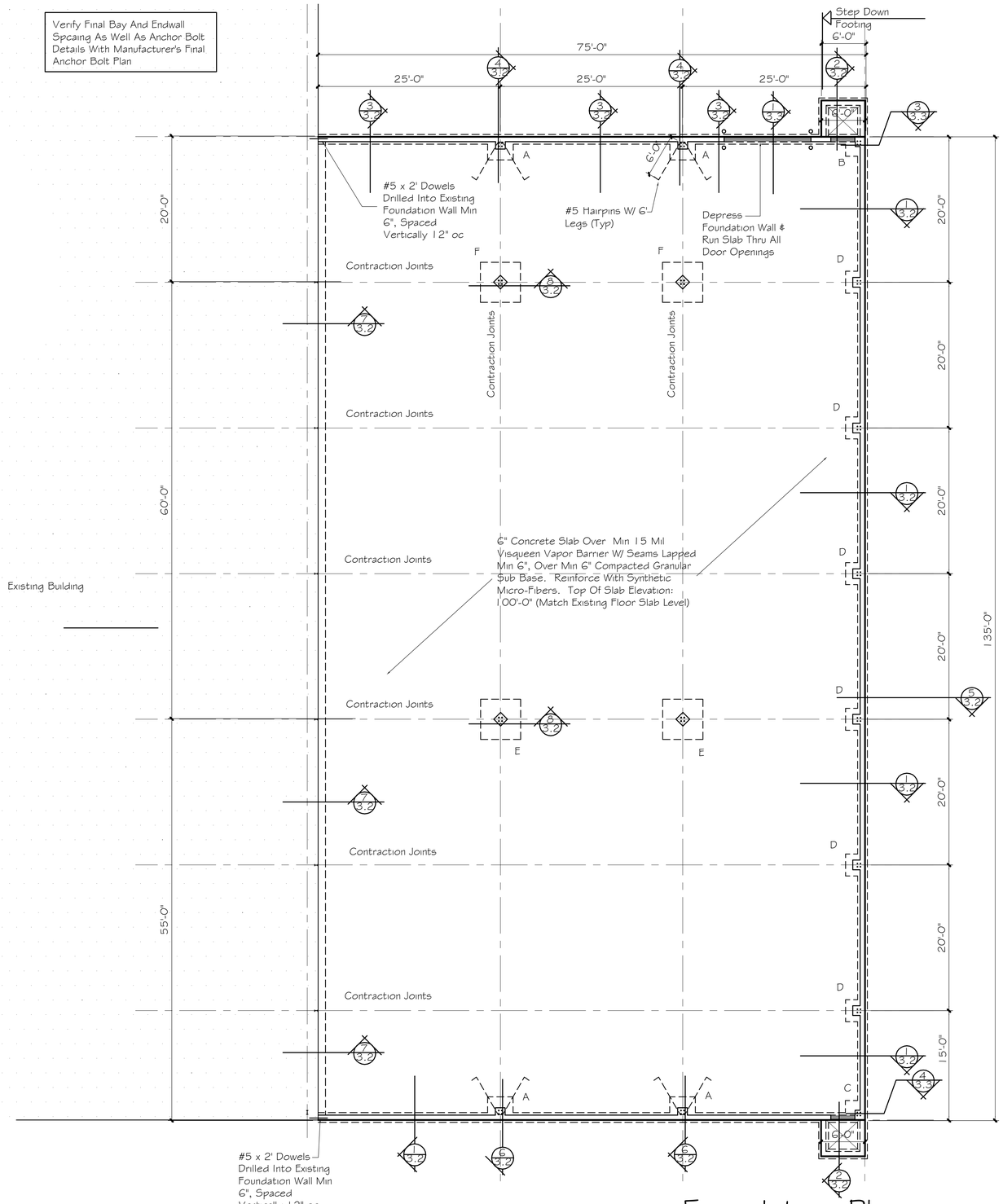

Foundation Plan 1/4" = 1'-0"

New Addition For:
Stellar Services
301 Business Park Circle
Stoughton, WI 53589

JENNINGS & WOLDT
Kitchen & Bath | Remodeling | Interior Design

Transcend
Architects & Engineers
193 Dewey Street
Sun Prairie, WI 53590
(608) 825-2222 voice
kvilland@gmail.com

PLAN NORTH

Foundation Plan

Scale: 1/8"= 1'-0"

REVISIONS:
Plans As Submitted For Review 4-6-2020

KWV
18 Feb 2020 | 2020-09

3.1

NO REPRODUCTION OF THESE PLANS OR THE DESIGNS CONTAINED HEREIN SHALL BE MADE WITHOUT EXPRESS WRITTEN CONSENT OF TRANSCEND ARCHITECTS AND ENGINEERS.

Verify Final Bay And Endwall Spcaing As Well As Anchor Bolt Details With Manufacturer's Final Anchor Bolt Plan

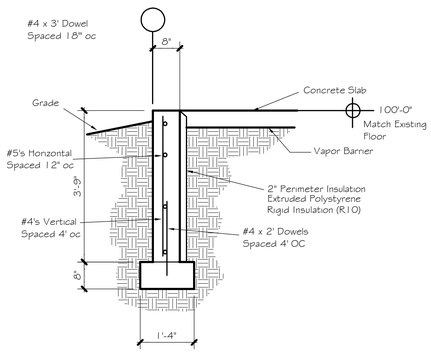

1 3.2 Section 1/2" = 1'-0"

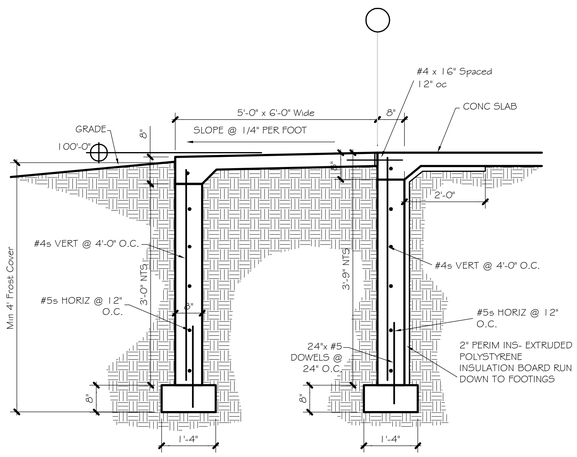

2 3.2 Section 1/2" = 1'-0"

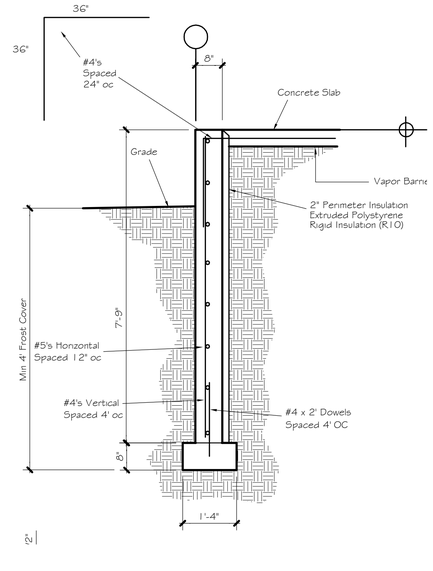

3 3.2 Section 1/2" = 1'-0"

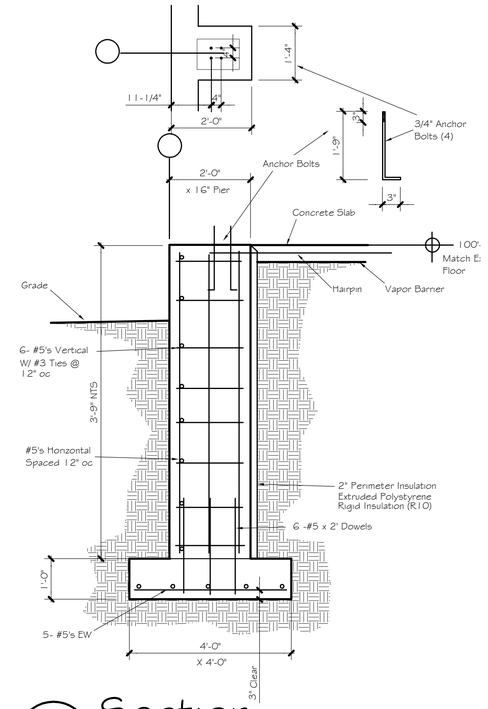

4 3.2 Section Pier And Anchor Bolt Detail A 1/2" = 1'-0"

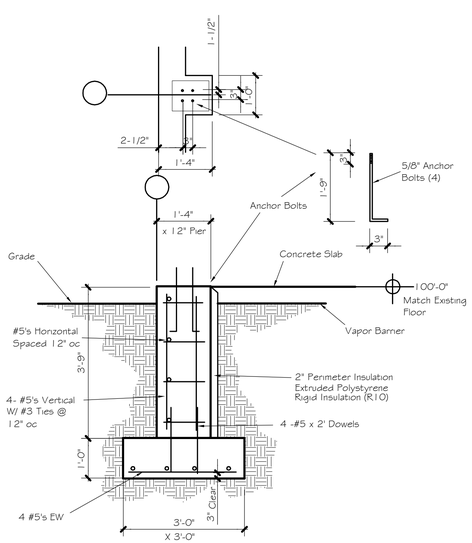

5 3.2 Section Pier And Anchor Bolt Detail D 1/2" = 1'-0"

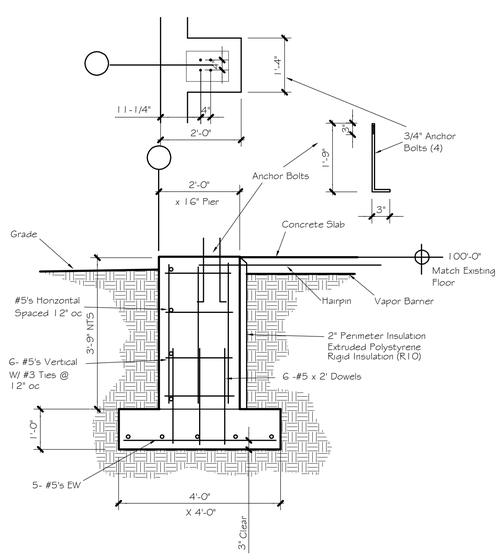

6 3.2 Section Pier And Anchor Bolt Detail A 1/2" = 1'-0"

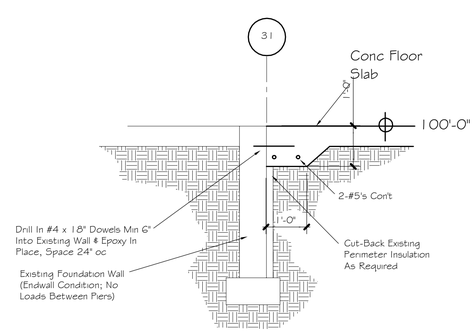

7 3.2 Section 1/2" = 1'-0"

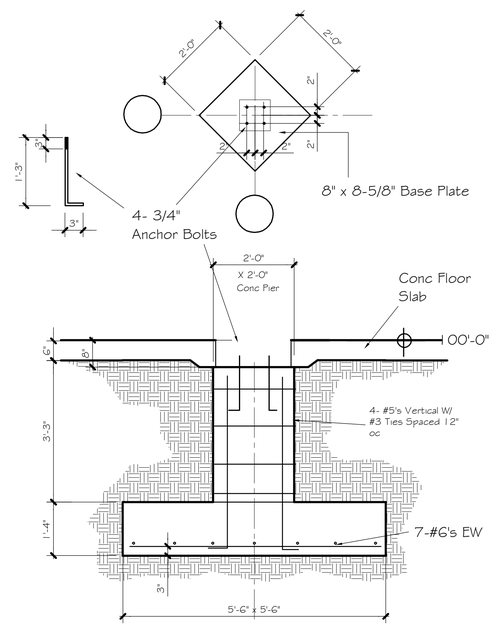

8 3.2 Section Pier And Anchor Bolt Detail E & F 1/2" = 1'-0"

Foundation Details Addition 1/2" = 1'-0"

NO REPRODUCTION OF THESE PLANS OR THE DESIGNS CONTAINED HEREIN SHALL BE MADE WITHOUT EXPRESS WRITTEN CONSENT OF TRANSCEND ARCHITECTS AND ENGINEERS.

New Addition For:
Stellar Services
301 Business Park Circle
Stoughton, WI 53589

JENNINGS & WOLDT
Kitchen & Bath | Remodeling | Interior Design

Transcend
Architects & Engineers
193 Dewey Street
Sun Prairie, WI 53590
(608) 825-2222 voice
kvilland@gmail.com

PLAN NORTH

Foundation
Details
Addition

Scale: 1/2"= 1'-0"

REVISIONS:
Plans As Submitted For
Review 4-6-2020

KWV
16 Feb 2020 | 2020-09

3.2

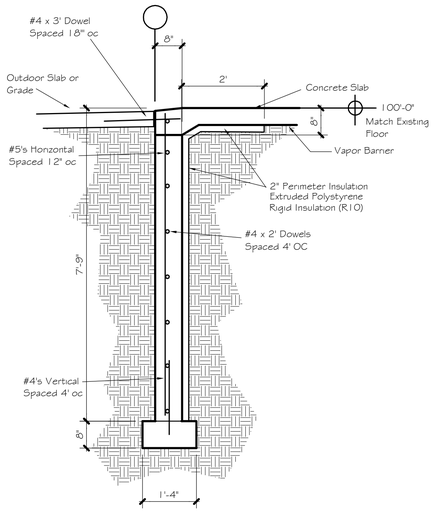

1 3.3 Section 1/2" = 1'-0"

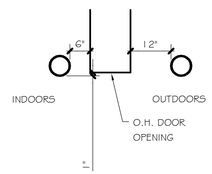

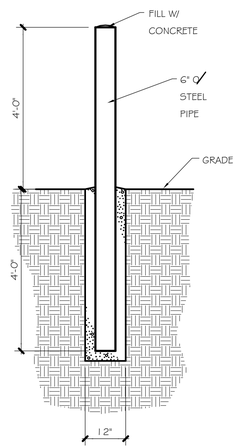

2 3.3 Section 1/2" = 1'-0"

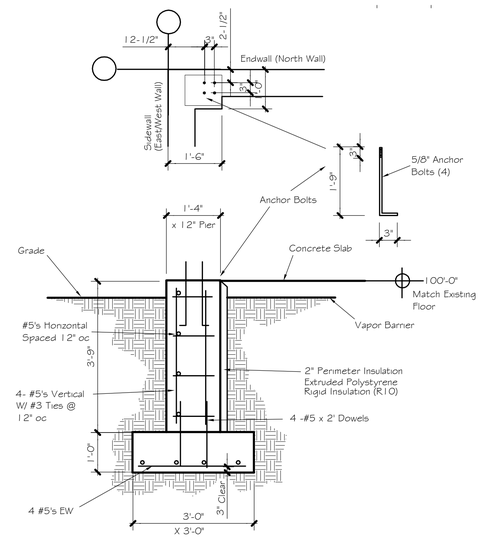

3 3.3 Section Pier And Anchor Bolt Detail B 1/2" = 1'-0"

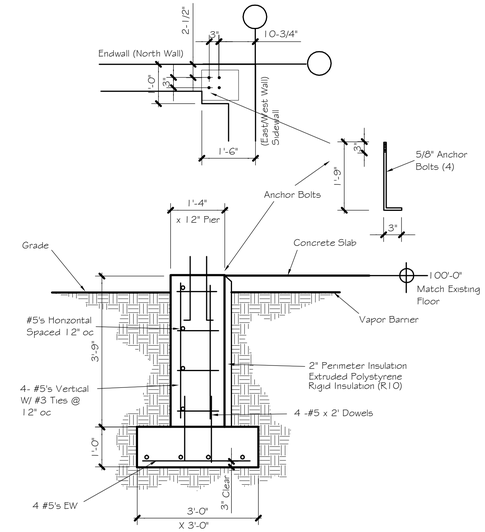

4 3.3 Section Pier And Anchor Bolt Detail C 1/2" = 1'-0"

Verify Final Bay And Endwall Spcaing As Well As Anchor Bolt Details With Manufacturer's Final Anchor Bolt Plan

CONCRETE & REINFORCING STEEL SPECIFICATIONS

1. SCHEDULE OF CONCRETE MIX REQUIREMENTS:

USE	28 DAY STRENGTH	MIN. CEMENT	SLUMP (INCH)	MAX. AGGREGATE (INCH)
FLOOR SLABS	3,000 PSI	5 - BAG	3"	3/4"
WALLS & PIERS	3,000 PSI	5 - BAG	5"	3/4"
FOOTINGS	3,000 PSI	5 - BAG	5"	1-1/2"
FLOOR TOPPING	3,000 PSI	5 - BAG	5"	3/8"

2. CONCRETE EXPOSED TO WEATHER (RETAINING WALLS, OUTSIDE SLABS, WALKS, CURBS, ETC., BUT EXCLUDING FOUNDATION WALL) SHALL CONTAIN 4 TO 7 PERCENT AIR BY VOLUME
3. DELIVERY TICKETS FOR EACH LOAD OF CONCRETE DELIVERED TO THE JOB SITE SHALL BE FURNISHED UPON REQUEST TO THE ARCHITECT. TICKET INFORMATION SHALL CONTAIN ALL PERTINENT DESIGN INFORMATION, INCLUDED AMOUNT OF WATER ADDED AT JOBSITE, IF ANY.
4. REINFORCING STEEL SHALL CONFORM TO ASTM A615-GRADE 60, EXCEPT THAT #3 BARS SHALL BE GRADE 40.
5. LAP ALL HORIZONTAL REINFORCING AT SPLICES AND AROUND ALL CORNERS 24 BAR DIAMETERS, MINIMUM, UNLESS NOTED OTHERWISE.
6. SLAB REINFORCING SHALL BE 100% POLYPROPYLENE SYNTHETIC FIBERS AS MANUFACTURED BY FIBERMESH CO. MIX AT 1.5 LBS. PER CU. YD.
7. NOTIFY ARCHITECT OF ANY UNUSUAL SOIL CONDITIONS. FOUNDATIONS ARE DESIGNED FOR A SOIL BEARING PRESSURE OF 2,000 P.S.F.

Foundation Details Addition 1/2" = 1'-0"

NO REPRODUCTION OF THESE PLANS OR THE DESIGNS CONTAINED HEREIN SHALL BE MADE WITHOUT EXPRESS WRITTEN CONSENT OF TRANSCEND ARCHITECTS AND ENGINEERS.

New Addition For:
Stellar Services
301 Business Park Circle
Stoughton, WI 53589

JENNINGS & WOLDT
Kitchen & Bath | Remodeling | Interior Design

Transcend
Architects & Engineers
193 Dewey Street
Sun Prairie, WI 53590
(608) 825-2222 voice
kvilland@gmail.com

PLAN NORTH

Foundation
Details
Addition

Scale: 1/2"= 1'-0"

REVISIONS:
Plans As Submitted For Review 4-6-2020

KWV
18 Feb 2020 | 2020-09

3.3

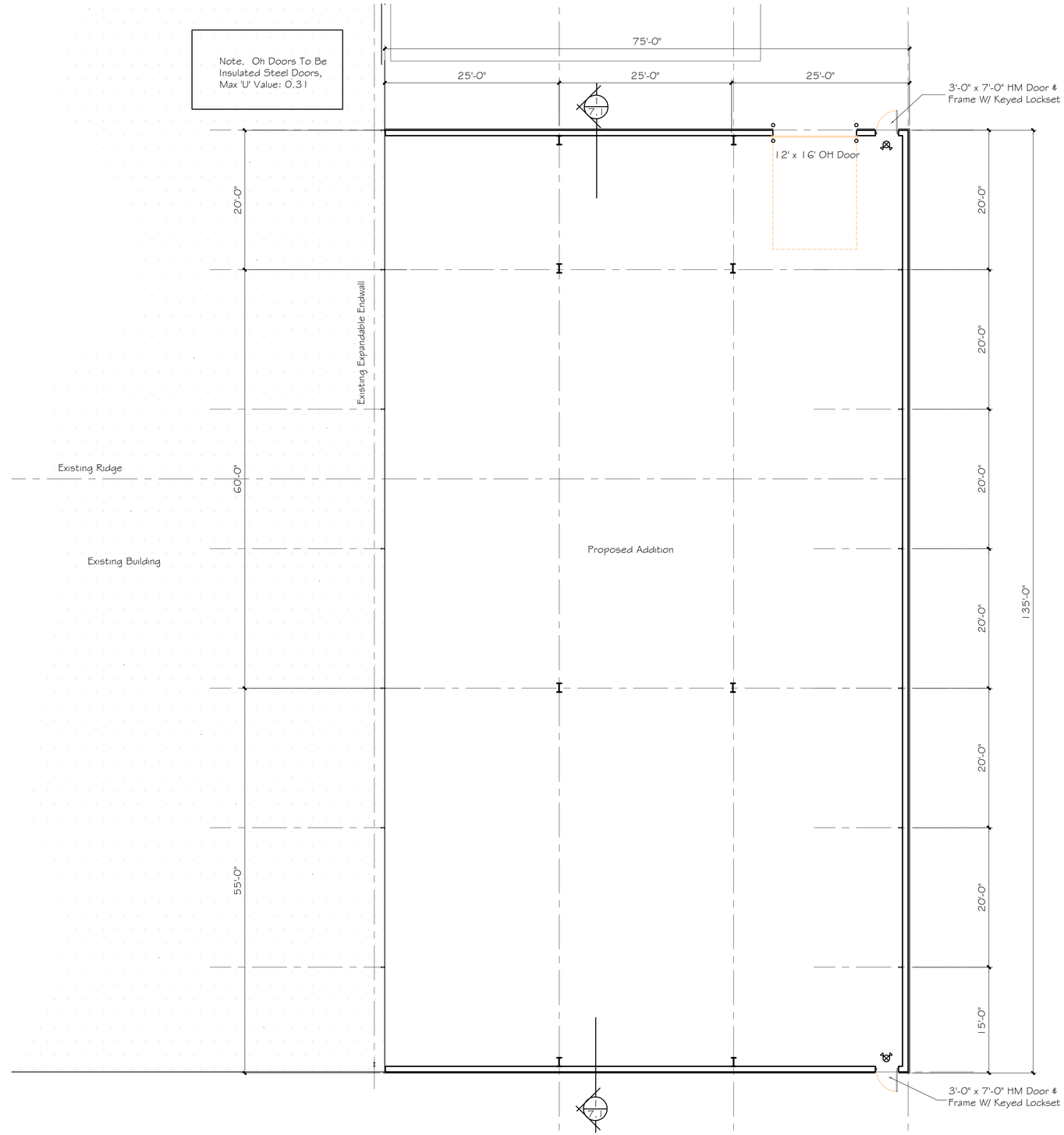

Approved Exit Light W/ Emergency Egress Lighting Combination

Main Level Floor Plan Addition 1/4" = 1'-0"

NO REPRODUCTION OF THESE PLANS OR THE DESIGNS CONTAINED HEREIN SHALL BE MADE WITHOUT EXPRESS WRITTEN CONSENT OF TRANSCEND ARCHITECTS AND ENGINEERS.

New Addition For:
Stellar Services
301 Business Park Circle
Stoughton, WI 53589

JENNINGS & WOLDT
Kitchen & Bath | Remodeling | Interior Design

Transcend
Architects & Engineers
193 Dewey Street
Sun Prairie, WI 53590
(608) 825-2222 voice
kvilland@gmail.com

PLAN NORTH

Main Level
Floor Plan
Addition

Scale: 1/8"= 1'-0"

REVISIONS:
Plans As Submitted For Review 4-6-2020

KWV
18 Feb 2020 | 2020-09

6.1

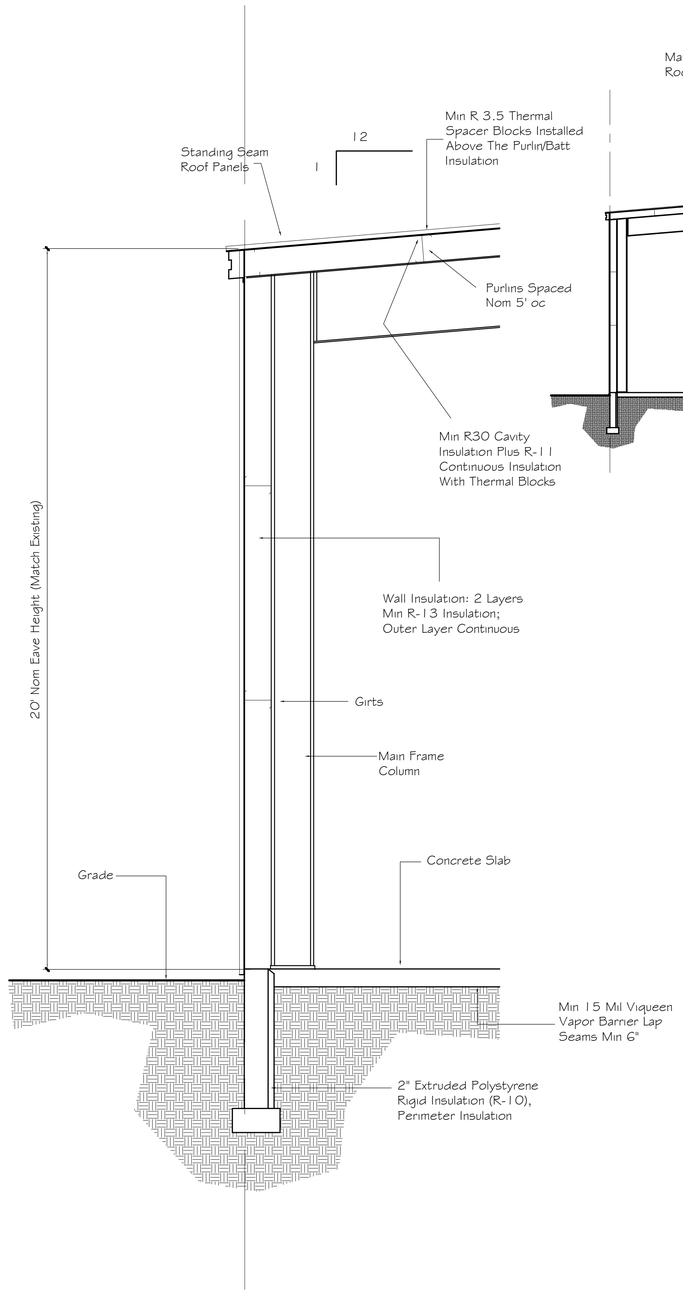

A 7.1 Wall Detail At Windows

3/4" = 1'-0"

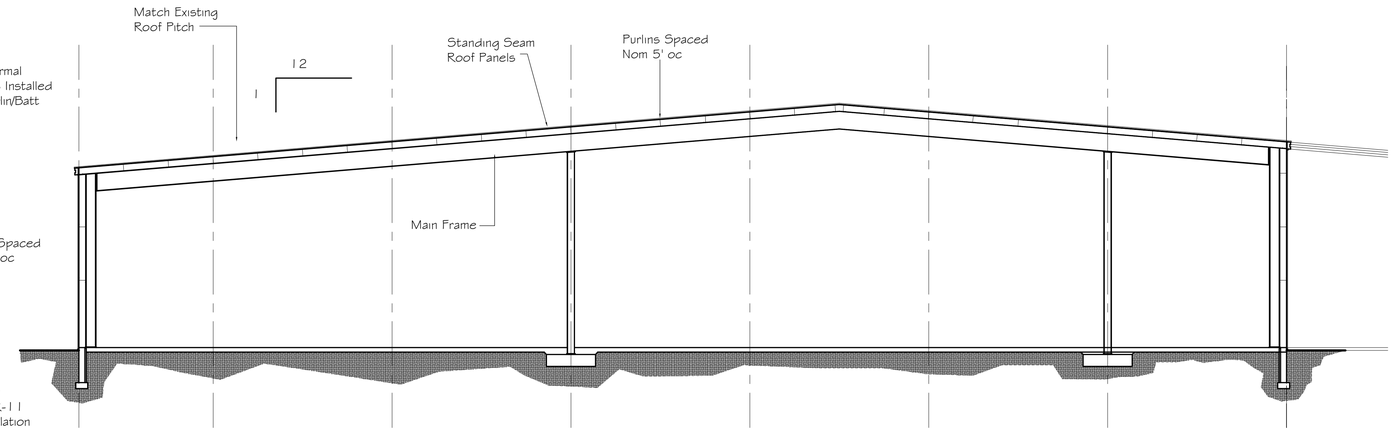

1 7.1 Section

1/8" = 1'-0"

Note. Oh Doors To Be
Insulated Steel Doors,
Max 'U' Value: 0.31

NO REPRODUCTION OF THESE PLANS OR THE DESIGNS CONTAINED HEREIN SHALL BE MADE WITHOUT EXPRESS WRITTEN CONSENT OF TRANSCEND ARCHITECTS AND ENGINEERS.

New Addition For:
Stellar Services
301 Business Park Circle
Stoughton, WI 53589

JENNINGS & WOLDT
Kitchen & Bath | Remodeling | Interior Design

Transcend
Architects & Engineers
193 Dewey Street
Sun Prairie, WI 53590
(608) 825-2222 voice
kvilland@gmail.com

PLAN NORTH

Building Sections

Scale as Noted

REVISIONS:
Plans As Submitted For Review 4-6-2020

KWV
18 Feb 2020 | 2020-09

7.1

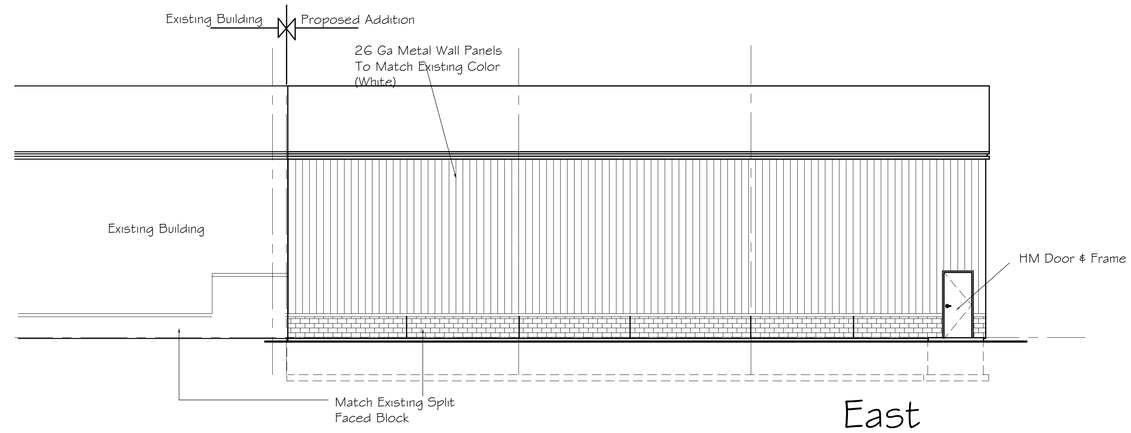

East

Existing North Elevation

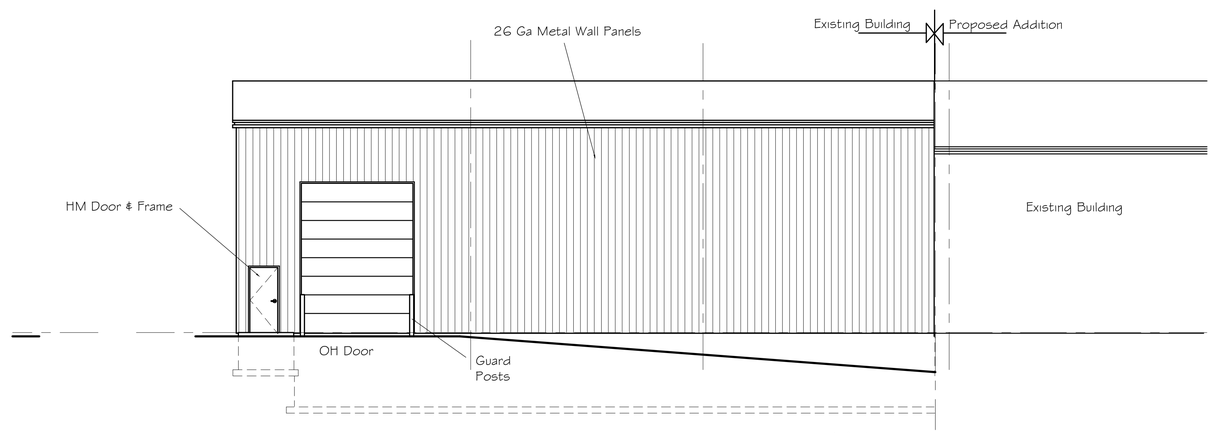

West

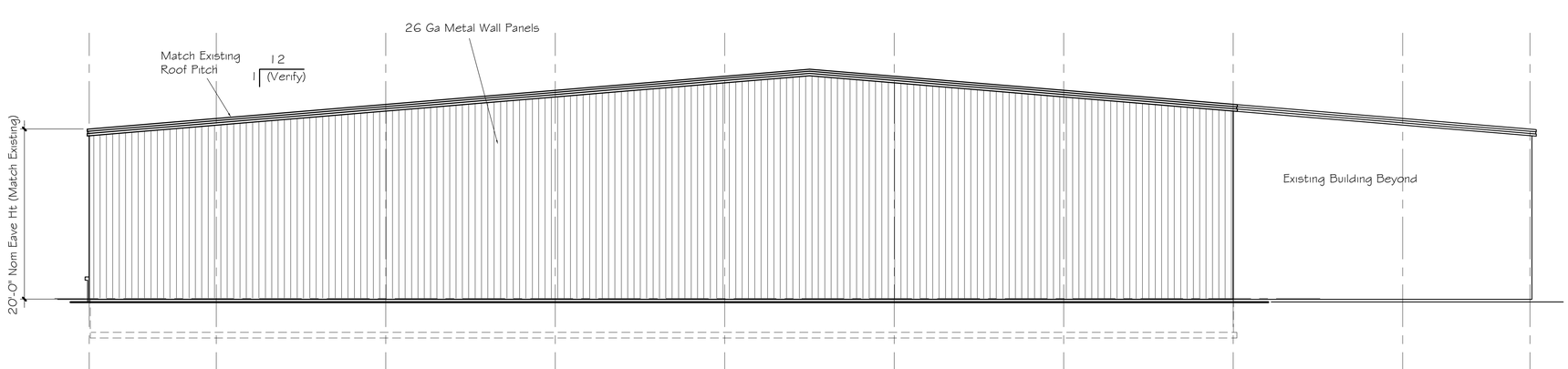

North

Exterior Elevations 1/8" = 1'-0"

NO REPRODUCTION OF THESE PLANS OR THE DESIGNS CONTAINED HEREIN SHALL BE MADE WITHOUT EXPRESS WRITTEN CONSENT OF TRANSCEND ARCHITECTS AND ENGINEERS.

New Addition For:
Stellar Services
301 Business Park Circle
Stoughton, WI 53589

JENNINGS & WOLDT
Kitchen & Bath | Remodeling | Interior Design

Transcend
Architects & Engineers
193 Dewey Street
Sun Prairie, WI 53590
(608) 825-2222 voice
kvilland@gmail.com

PLAN NORTH

Exterior Elevations

Scale: 1/8"= 1'-0"

REVISIONS:
Plans As Submitted For Review 4-6-2020
City Staff Comments Revisions Added Landscape Plan 4-20-2020

KWV
18 Feb 2020 | 2020-09

8.1

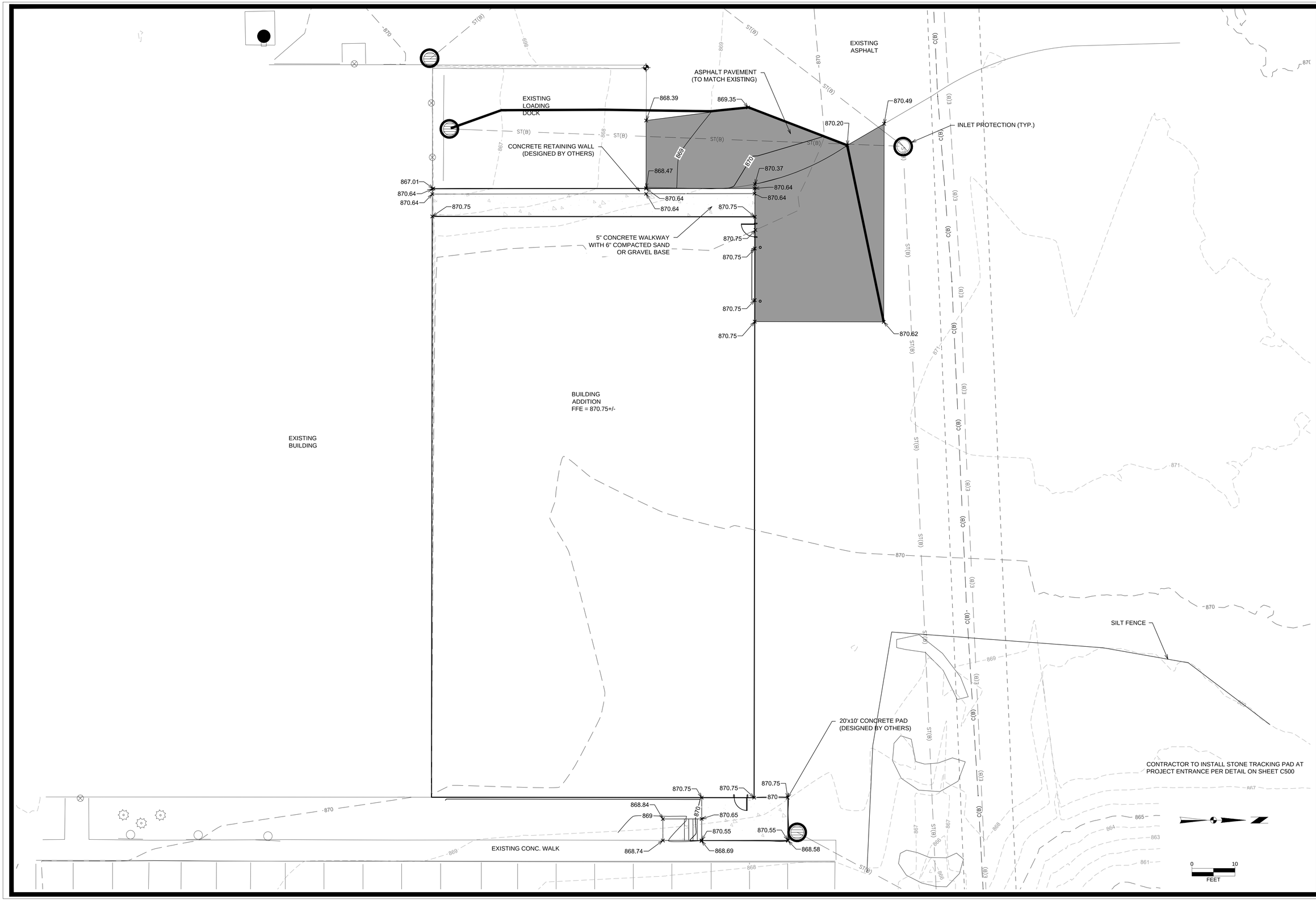

MARK	REVISION	DATE	BY

Engineer: ENGR | Checked By: CHKD | Scale: 1" = SCALE

Technician: TECH | Date: MM-DD-YYYY | T-R-S: TTN-RRW-SS

Project No: 120.0244.30

Sheet EXBT

STELLAR SERVICES - BUILDING ADDITION

CITY OF STOUGHTON, DANE COUNTY, WI

USLE EXHIBIT

SNYDER & ASSOCIATES, INC.

5010 VOGES ROAD
MADISON, WISCONSIN 53718
608-838-0444 | www.snyder-associates.com

SNYDER & ASSOCIATES

Project No: 120.0244.30

Sheet EXBT

DEVELOPMENT PLANS

FOR

STELLAR SERVICES - BUILDING ADDITION

LOCATED IN

CITY OF STOUGHTON, DANE COUNTY, WI

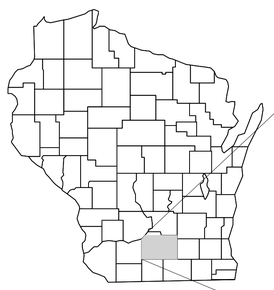

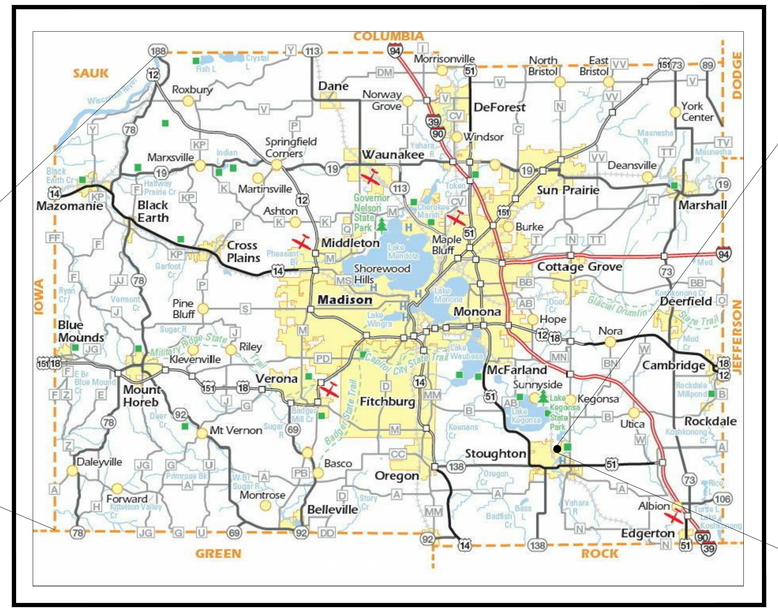

DANE COUNTY

SCALE: NTS

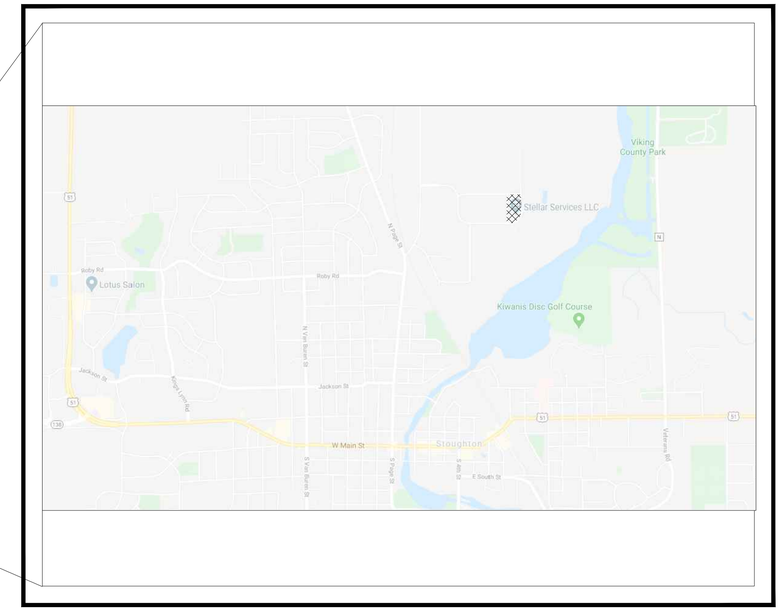

LOCATION MAP

SCALE: NTS

OWNER / DEVELOPER

CF INVESTMENTS, LLC
3636 SKYTOP ROAD
McFARLAND , WI 53558
608-576-4309

TO OBTAIN LOCATION OF PARTICIPANTS' UNDERGROUND FACILITIES BEFORE YOU DIG IN WISCONSIN

CALL DIGGERS HOTLINE
1-800-242-8511
TOLL FREE

WIS. STATUTE 182.0175 (1974) REQUIRES MIN. OF 3 WORK DAYS NOTICE BEFORE YOU EXCAVATE

Sheet List Table

Sheet Number	Sheet Title
G100	TITLE SHEET
C200	EXISTING SITE PLAN
C300	PROPOSED SITE PLAN
C400	GRADING PLAN
C500	EROSION CONTROL DETAILS

MARK	REVISION	DATE	BY

Engineer: BCA | Checked By: MLC | Scale: 1" = SCALE
Technician: MW | Date: 10-11-2019 | T-R-S: 7N-11E-4
Project No: 120.0244.30 | Sheet G100

STELLAR SERVICES - BUILDING ADDITION

CITY OF STOUGHTON, DANE COUNTY, WI

TITLE SHEET

SNYDER & ASSOCIATES, INC.
5010 VOGES ROAD
MADISON, WISCONSIN 53718
608-838-0444 | www.snyder-associates.com

SNYDER & ASSOCIATES

Project No: 120.0244.30
Sheet G100

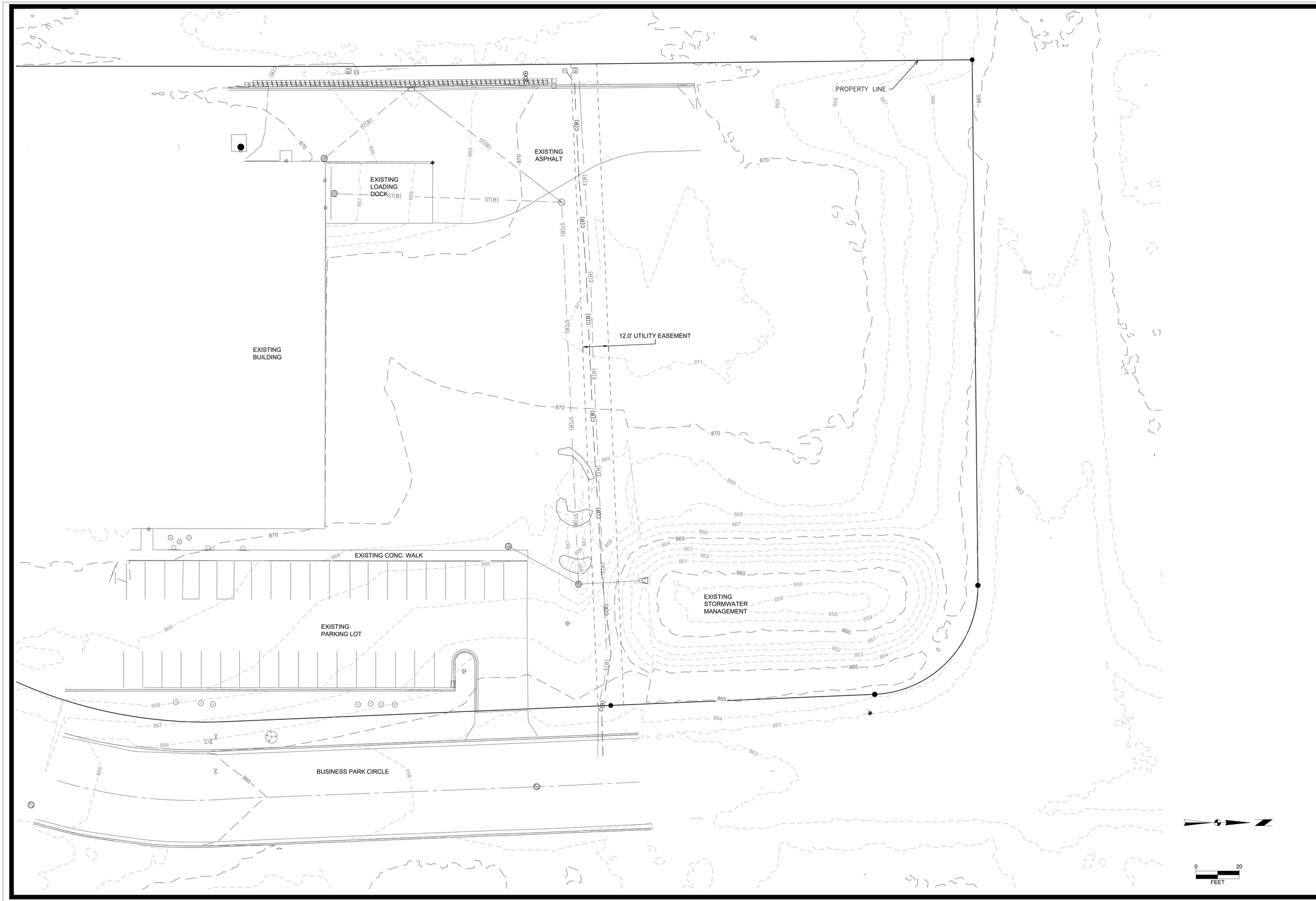

MARK	REVISION	DATE	BY

Engineer: ENGR | Checked By: CHKD | Scale: 1" = SCALE

Technician: TECH | Date: MM-DD-YYYY | T-R-S: TTN-RRW-SS

Project No: 120.0244.30 | Sheet C200

STELLAR SERVICES - BUILDING ADDITION

CITY OF STOUGHTON, DANE COUNTY, WI

EXISTING SITE PLAN

SNYDER & ASSOCIATES, INC.

5010 VOGES ROAD
MADISON, WISCONSIN 53718
608-838-0444 | www.snyder-associates.com

SNYDER & ASSOCIATES

Project No: 120.0244.30

Sheet C200

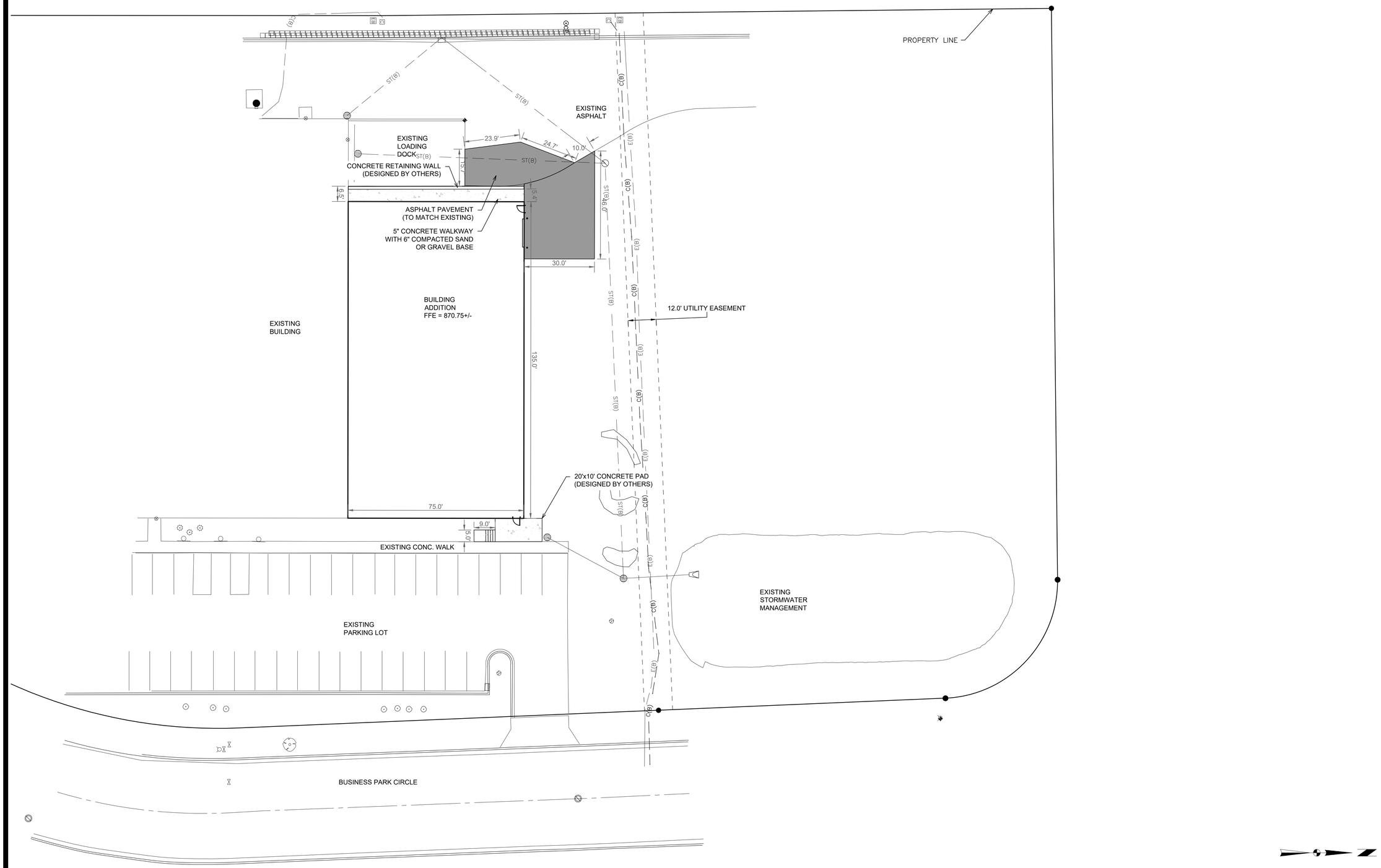

MARK	REVISION	DATE	BY

Engineer: ENGR | Checked By: CHKD | Scale: 1" = SCALE

Technician: TECH | Date: MM-DD-YYYY | T-R-S: TTN-RRW-SS

Project No: 120.0244.30 | Sheet C300

STELLAR SERVICES - BUILDING ADDITION

CITY OF STOUGHTON, DANE COUNTY, WI

PROPOSED SITE PLAN

SNYDER & ASSOCIATES, INC.

5010 VOGES ROAD
MADISON, WISCONSIN 53718
608-838-0444 | www.snyder-associates.com

SNYDER & ASSOCIATES

Project No: 120.0244.30

Sheet C300

EXISTING LOADING DOCK

EXISTING ASPHALT

ASPHALT PAVEMENT (TO MATCH EXISTING)

CONCRETE RETAINING WALL (DESIGNED BY OTHERS)

INLET PROTECTION (TYP.)

5" CONCRETE WALKWAY WITH 6" COMPACTED SAND OR GRAVEL BASE

BUILDING ADDITION FFE = 870.75+/-

EXISTING BUILDING

SILT FENCE

20'x10' CONCRETE PAD (DESIGNED BY OTHERS)

CONTRACTOR TO INSTALL STONE TRACKING PAD AT PROJECT ENTRANCE PER DETAIL ON SHEET C500

EXISTING CONC. WALK

868.39
869.35
870.49
870.20
868.47
870.37
867.01
870.64
870.64
870.64
870.64
870.64
870.75
870.75
870.75
870.75
870.75
870.75
870.62
870.75
870.75
870.75
870
868.84
869
870
870.65
870.55
870.55
868.74
868.69
868.58

0 10
FEET

MARK	REVISION	DATE	BY

Engineer: ENGR | Checked By: CHKD | Scale: 1" = SCALE

Technician: TECH | Date: MM-DD-YYYY | T-R-S: TTN-RRW-SS

Project No: 120.0244.30

Sheet C400

STELLAR SERVICES - BUILDING ADDITION

CITY OF STOUGHTON, DANE COUNTY, WI

GRADING PLAN

SNYDER & ASSOCIATES, INC.

5010 VOGES ROAD
MADISON, WISCONSIN 53718
608-838-0444 | www.snyder-associates.com

SNYDER & ASSOCIATES

Project No: 120.0244.30

Sheet C400

CITY OF STOUGHTON
DEPARTMENT OF PLANNING & DEVELOPMENT
207 S. Forrest Street, Stoughton, WI. 53589
www.cityofstoughton.com/planning

RODNEY J. SCHEEL
DIRECTOR
(608) 873-6619
fax: (608) 873-5519

April 22, 2020

JW Remodeling
Tim Bongle
526 Commercial Avenue
Sun Prairie, WI. 53590

Dear Mr. Bongle:

I have completed a final review of the proposed building addition/site plan for Stellar Services, LLC., 301 Business Park Circle. This item is planned to be on the Plan Commission and Business Park North agendas for May 11, 2020 of which you will receive notice. This project is also subject to the Business Park North Covenants as outlined below. As noted, additional information may be required to be provided or shown on the plan.

Zoning Code Requirements:

1. The property at 301 Business Park Circle is zoned PI – Planned Industrial. Wholesale services are permitted outright.

2. Wholesale uses are described as follows:
   Description: Indoor storage and wholesaling land uses are primarily oriented to the receiving, holding, and shipping of packaged materials for a single business or a single group of businesses. With the exception of loading and parking facilities, such land uses are contained entirely within an enclosed building. Examples of this land use include conventional warehouse facilities, long-term indoor storage facilities, and joint warehouse and storage facilities.

3. The parking requirement for wholesale uses are one space per 2,000 square feet of gross floor area. **20 parking spaces are required. There is more than ample existing parking spaces.**

4. The Comprehensive Plan, Future Land Use Map designates this property as Planned Industrial which is consistent with the zoning and existing use.

5. The following are the minimum building setback and maximum height requirements of the Planned Industrial district: Front yard setback – 20 feet; Side yard setback – 10 feet; Rear yard setback – 20 feet; Max building height – 40 feet. **The plan meets these requirements.**

6. Accessible parking spaces shall be provided at a size, number, location and with signage as specified by state and federal regulations. **Expected.**

7. All access drives shall have a maximum width of 30 feet as measured at the right-of-way line. Access drives may be flared between the right-of-way line and the roadway up to a maximum of 5 additional feet unless explicitly approved by the Plan Commission. **The existing access drives are not changing.**

8. The building shall employ only high quality, decorative construction materials on the visible exterior as required in section 78-716. Architectural and design elements shall be compatible with the surrounding area and community standards. **The addition is proposed to match the existing building.**

9. Per section 78-704 (13)(a), bicycle parking is required equal to 10% of the automobile parking space requirement. There are specific requirements related to bicycle parking in section 78-704 (13)(c). **Two bike stalls are delineated on the plan.**

10. The maximum floor area ratio is 1. This is calculated by dividing the total floor area of all buildings by the gross site area. **The plan meets this requirement.**

11. The minimum landscape surface ratio (LSR) is 25 percent. **The plan meets this requirement.**

12. A landscaping plan for the building addition is required as follows:
    - Building foundations: 40 points of landscaping are required per 100 feet of foundation perimeter. 435 feet of foundation requires 174 points of landscaping which is required to be planted within 10 feet of the building foundations. Climax and tall trees cannot be used to meet this requirement.
    - Developed Lots: 10 points of landscaping are required per 1,000 square feet of building footprint. 10,125 square feet of building requires 102 landscaping points.

    The provided landscaping plan takes into account the entire building including the addition.

13. There are no bufferyard requirements since the adjacent properties are zoned planned industrial.

14. Article VII of the city zoning code provides the following requirements related to lighting: "Parking and traffic circulation areas serving 6 or more vehicles shall be lit so as to ensure the safe and efficient use of said areas during the hours of use. The lighting element cannot be seen from any residentially zoned property. **The parking is not planned to change. We'll need a photometric plan for any proposed external lighting changes.**

15. A trash enclosure for the handling of waste is required to be screened and gated with 6-foot fencing. **The trash enclosure is existing.**

16. Outdoor storage is only allowed as an accessory conditional use. This would also trigger other requirements including screening of storage and separation from required parking and circulation areas. **No outdoor storage is proposed.**

17. An erosion control plan, application and fees are required for this project. Dane County Land & Water Resources, the City's consultant, will review the plan and perform inspections. **The application has been submitted electronically to the Department of Planning & Development office. The existing stormwater management is sufficient to accommodate the expansion.**

18. Contact Jill Weiss, Stoughton Utilities Director at 608-873-3379 for all electric, wastewater and water service questions. A street opening permit will be necessary from the Public Works Department for any work in the street right-of-way.

19. State of Wisconsin approved building plans may be necessary prior to issuance of a building permit but is not necessary to begin the City review process. **A post construction survey will need to be provided for our records and to verify setbacks.**

<u>Business Park Covenants:</u>
The following items are contained in the Business Park Covenants and will need to be addressed as noted:

1. Plan Submittal
   a. Name and mailing address of developer/owner. **Provided.**
   b. Utilities and utility right of way easements. **Easements are shown. Elevation alterations of 6-inches or more within any easement need to be approved by Stoughton Utilities.**
   c. Exterior signs. **No signage proposed.**
   d. Exterior Lighting. **Need details if applicable.**
   e. Clearing, grading, and drainage plan showing proposed clearing limits, existing and proposed contours at two foot intervals. **A grading plan is provided.**
   f. Site statistics, including site square footage, percent of site coverage's and percent of park or open space. **Provided.**
   g. All exterior materials and colors, including manufacturer's name and catalogue numbers or samples of the same. **Addition is proposed to match the existing building.**
   h. Location and dimensions of all proposed outdoor storage areas, and the location and dimensions of all fencing and screening. **Outdoor Storage is not allowed unless by accessory conditional use permit.**
2. Development Standards
   a. The front facade and street-side facades shall include brick, stone, architectural concrete panels, architectural metal, architectural wood and/or glass. Unfaced concrete block, structural concrete, prefabricated metal siding, and the like are discouraged from such facade areas. The use of these materials shall only be in a manner approved by the Committee. Special consideration will be exercised for structures built on a corner lot. **This is a corner lot so consideration should be given in requiring all frontages to be brick.**
   b. All elevations of the building shall be designed in a consistent and coherent architectural manner. Changes in materials, color, and/or texture when permitted, shall occur at points relating to the massing, fenestration or overall design concept of the building. **Expected.**
   c. "All electrical and air conditioning structures, including towers and air handling units, regardless of location and whether on the roof or otherwise, shall be concealed by landscaping or by decorative screening materials which form an integral part of the design." **Expected.**

d. All areas intended to be utilized for parking space and driveways shall be surfaced with bituminous asphalt or concrete." **Existing.**

e. "All parking stalls shall be marked with painted lines not less than 4" wide." **Expected.**

f. "No parking areas will be permitted within the building set back lines with the following two exceptions:
   1. Office employee and visitor parking may be permitted within the front yard setback lines subject to approval of the Committee. **Parking is existing.**
   2. Lots bounded by more than one road may have parking areas within the building set back lines along roads other than the one on which the building fronts subject to approval by the Committee." **N/A**

g. "A scale drawing of any sign, trademark or advertising device to be used on any lot or the exterior of any building or structure will be submitted to the Committee in triplicate or the written approval by the Committee." **None proposed.**

h. "The front yard setback area shall be landscaped with an effective combination of trees, ground cover and shrubbery. All unpaved areas not utilized for parking shall be landscaped in a similar manner. The entire area between the curb and a point 10 feet in back of the front property line shall be landscaped, except for any access driveway in said area. Notwithstanding the above, the entire area between the right-of-way and the building setback line shall be densely landscaped with a combination of effective visual screening on all use areas." **Meeting the zoning code requirements will sufficiently meet this requirement which is consistent with previous approvals.**

i. "Areas used for parking shall be landscaped and/or fenced in such a manner as to interrupt or screen said areas from view of access streets, freeways, and adjacent properties. Plant materials used for this purpose shall consist of lineal or grouped masses of shrubs and/or trees." **Meeting the zoning code requirements will sufficiently meet this requirement which is consistent with previous approvals.**

j. "All outdoor storage shall be visually screened from access streets and adjacent property." **Outdoor storage is only allowed as a conditional use and is not part of this approval process.**

k. "Outdoor storage shall be meant to include parking of all company owned and operated vehicles, with the exception of passenger vehicles." **Only if applicable.**

l. "All outdoor refuse collection areas shall be visually screened from access streets and adjacent property by a complete opaque screen." **Need details if necessary.**

m. "Architectural Review. **The Business Park North Committee will take into account the appearance of all buildings, parking areas and storage areas."**

2. Any other information considered pertinent by the Committee.

If you have any questions, please contact me at 608-646-0421

Sincerely,
City of Stoughton

Michael P. Stacey

Michael P. Stacey
Zoning Administrator