CITY OF STOUGHTON, 381 E. MAIN STREET, STOUGHTON, WISCONSIN

RESOLUTION OF THE PLAN COMMISSION

Approving a site plan to expand the parking and stormwater management areas at 421 Glacier Moraine Drive, Stoughton, WI.

Committee Action: Plan Commission approves the request – 0

Fiscal Impact:

File Number:	R - 17 - 2020	**Date Introduced:**	August 25, 2020

RECITALS

A. Exclusively Roses (the "Applicant") is seeking site plan approval to expand the parking and stormwater management areas at 421 Glacier Moraine Drive, in the City of Stoughton, Dane County, Wisconsin (the "Property").

B. The Property is zoned Planned Industrial and the proposed site plan is subject to Plan Commission approval.

C. The City Plan Commission reviewed and discussed the proposed site improvements at their regular August 25, 2020 meeting and found that the site improvements meet the intent of the zoning ordinance and Comprehensive Plan.

RESOLUTION

BE IT RESOLVED, the City of Stoughton Plan Commission approves the site plan to expand the parking and stormwater management areas at 421 Glacier Moraine Drive, Stoughton, WI, with the following conditions:

- Meet conditions of the staff review letter dated 8/14/20

_____

Mayor Tim Swadley Date
Planning Commission Chair

City of Stoughton Application for Site Plan Review and Approval (Requirements per Section 78-908)

Applicant Name: EXCLUSIVELY ROSES - KATIE SAPPEY AND BRADFORD ANDERSON

Applicant Address: 221 BUSINESS PARK CIRCLE

Applicant Phone and Email: (608) 877-8879

Property Owner Name (if different than applicant): _____

Property Owner Phone: _____

Subject Property Address: 421 GLACIER MORAINE DRIVE

This form is designed to be used by the Applicant as a guide to submitting a complete application for a site plan review *and* by the City to process said application. Part II is to be used by the Applicant to submit a complete application; Parts I - III are to be used by the City when processing said application.

I. Record of Administrative Procedures for City Use

Application form filed with Zoning Administrator Date: 8/12/20

II Application Submittal Packet Requirements for Applicants Use

Prior to submitting the final complete application as certified by the Zoning Administrator, the Applicant shall submit an initial draft application packet for staff review followed by one revised final application packet based upon staff review and comments. The application shall include the following:

☑ **(a) A *written description* of the intended use describing in reasonable detail the following:**

- ☐ Existing zoning district(s) (and proposed zoning district(s) if different).
- ☐ Comprehensive Plan Future Land Use Map designation(s).
- ☐ Current land uses present on the subject property.
- ☐ Proposed land uses for the subject property (per Section 78-206).
- ☐ Projected number of residents, employees, and daily customers.
- ☐ Proposed amount of dwelling units, floor area, impervious surface area, and landscape surface area, and resulting site density, floor area ratio, impervious surface area ratio, and landscape surface area ratio.
- ☐ Operational considerations relating to hours of operation, projected normal and peak water usage, sanitary sewer or septic loadings, and traffic generation.
- ☐ Operational considerations relating to potential nuisance creation pertaining to noncompliance with the performance standards addressed in Article VII (Sections 78-701 through 721) including: street access, traffic visibility, parking, loading, exterior storage, exterior lighting, vibration, noise, air pollution, odor, electromagnetic radiation, glare and heat, fire and explosion, toxic or noxious materials, waste materials, drainage, and hazardous materials.
- ☐ If no nuisances will be created (as indicated by complete and continuous compliance with the provisions of Article VII), then include the statement "The proposed development shall comply with all requirements of Article VII".
- ☐ Exterior building and fencing materials (Sections 78-716 and 78-718).

- ❑ Possible future expansion and related implications for points above.
- ❑ Any other information pertinent to adequate understanding by the Plan Commission of the intended use and its relation to nearby properties.

❑ **(c) A *Property Site Plan* drawing which includes the following:**

- ❑ A title block which indicates the name, address and phone/fax number(s) of the current property owner and/or agent(s) (developer, architect, engineer or planner) for project.
- ❑ The date of the original plan and the latest date of revision to the plan.
- ❑ A north arrow and a graphic scale (not smaller than one inch equals 100 feet).
- ❑ A reduction of the drawing provided electronically at 11" x 17".
- ❑ A legal description of the subject property.
- ❑ All property lines and existing and proposed right-of-way lines with bearings and dimensions clearly labeled.
- ❑ All existing and proposed easement lines and dimensions with a key provided and explained on the margins of the plan as to ownership and purpose.
- ❑ All required building setback lines.
- ❑ All existing and proposed buildings, structures, and paved areas, including building entrances, walks, drives, decks, patios, fences, utility poles, drainage facilities, utilities and walls.
- ❑ The location and dimension (cross-section and entry throat) of all access points onto public streets.
- ❑ The location and dimension of all on-site parking (and off-site parking provisions if they are to be employed), including a summary of the number of parking stalls provided versus required by the Ordinance.
- ❑ The location and dimension of all loading and service areas on the subject property and labels indicating the dimension of such areas.
- ❑ The location of all outdoor storage areas and the design of all screening devices.
- ❑ The location, type, height, size and lighting of all signage on the subject property.
- ❑ The location, height, design/type, illumination power and orientation of all exterior lighting on the subject property—including the clear demonstration of compliance with Section 78-707.
- ❑ The location and type of any permanently protected green space areas.
- ❑ The location of existing and proposed drainage facilities.
- ❑ In the legend, data for the subject property on the following

  a. Lot Area

  b. Floor Area

  c. Floor Area Ratio (b/a)

  d. Impervious Surface Area

  e. Impervious Surface Ratio (d/a)

  f. Building height

- ❑ ❑ **(d) A *Detailed Landscaping Plan* of the subject property:**
  - ❑ Scale same as main plan (> or equal to 1" equals 100').
  - ❑ Electronic Map at 11" x 17".
  - ❑ Showing the location of all required bufferyard and landscaping areas.
  - ❑ Showing existing and proposed Landscape Points including fencing.
  - ❑ Showing berm options for meeting said requirements.
  - ❑ Demonstrating complete compliance with the requirements of Article VI.
  - ❑ Providing individual plant locations and species, fencing types and heights, and berm heights.
- ❑ ❑ **(e) A *Grading and Erosion Control Plan*:**
  - ❑ Scale same as main plan (> or equal to 1" equals 100').
  - ❑ Electronic map at 11" x 17"
  - ❑ Showing existing and proposed grades including retention walls and related devices, and erosion control measures.
- ❑ ❑ **(f) *Elevation Drawings* of proposed buildings or remodeling of existing buildings:**
  - ❑ Showing finished exterior treatment.
  - ❑ With adequate labels provided to clearly depict exterior materials, texture, color and overall appearance.
  - ❑ Perspective renderings of the proposed project and/or photos of similar structures may be submitted, but not in lieu of adequate drawings showing the actual intended appearance of the buildings.

NOTE: Initiation of Land Use or Development Activity: Absolutely no land use or development activity, including site clearing, grubbing, or grading shall occur on the subject property prior to the approval of the required site plan. Any such activity prior to such approval shall be a violation of law and shall be subject to all applicable enforcement mechanisms and penalties.

NOTE: Modification of an Approved Site Plan: Any and all variation between development and/or land use activity on the subject property and the approved site plan is a violation of law. An approved site plan shall be revised and approved via the procedures of Subsections 78-908(2) and (4) so as to clearly and completely depict any and all proposed modifications to the previously approved site plan, prior to the initiation of said modifications.

III. Final Application Packet Information for City Use

Receipt of (8.5" by 11" text and 11" by 17" graphics electronically) copies of complete final application packet by Zoning Administrator

Date: 8/12/20

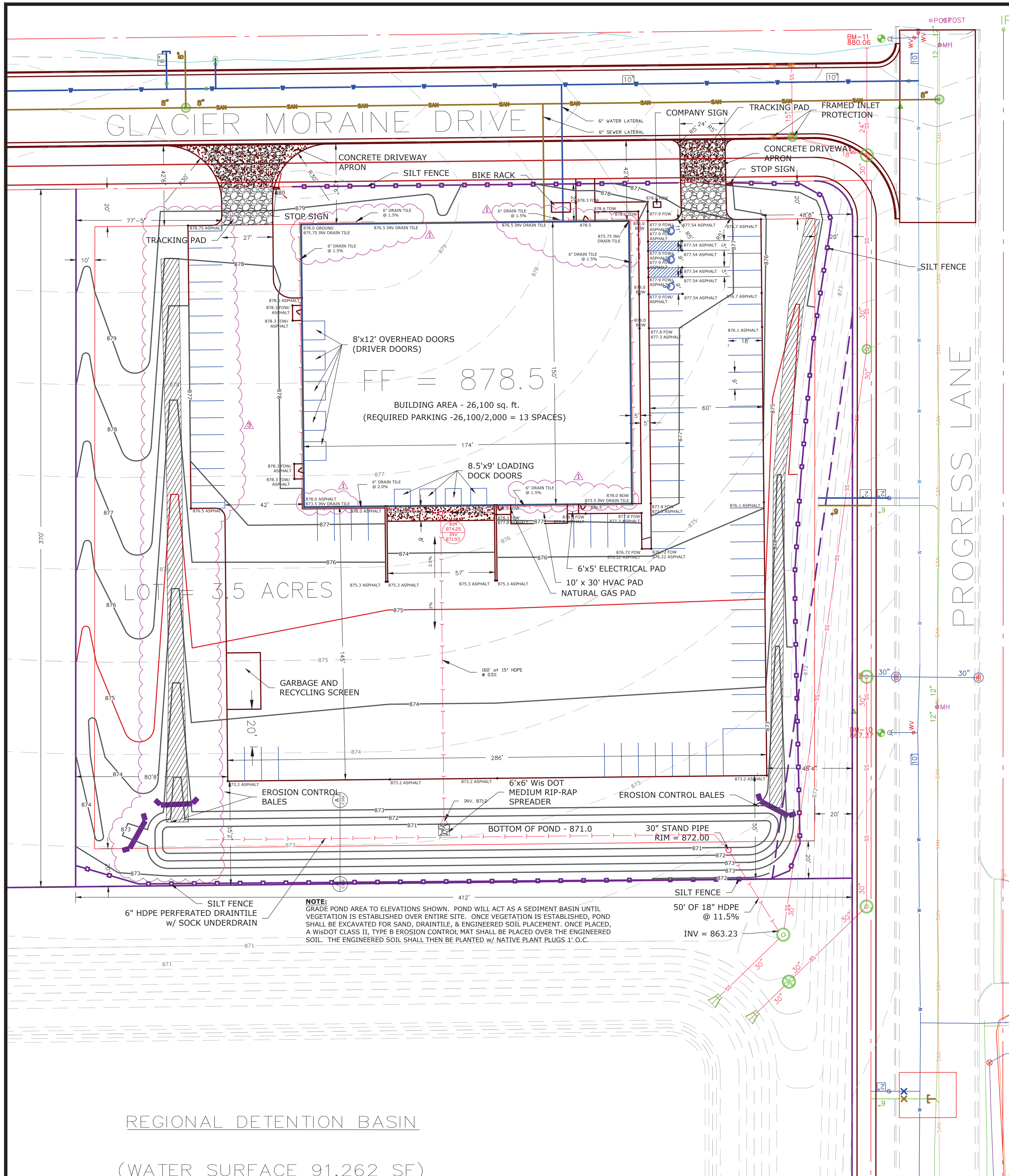

NOTE:
GRADE POND AREA TO ELEVATIONS SHOWN. POND WILL ACT AS A SEDIMENT BASIN UNTIL VEGETATION IS ESTABLISHED OVER ENTIRE SITE. ONCE VEGETATION IS ESTABLISHED, POND SHALL BE EXCAVATED FOR SAND, DRAINTILE, & ENGINEERED SOIL PLACEMENT. ONCE PLACED, A WisDOT CLASS II, TYPE B EROSION CONTROL MAT SHALL BE PLACED OVER THE ENGINEERED SOIL. THE ENGINEERED SOIL SHALL THEN BE PLANTED w/ NATIVE PLANT PLUGS 1' O.C.

LEGEND

- EXISTING CURB AND GUTTER
- EXISTING CONCRETE FLATWORK
- EXISTING BUILDING LINE
- EXISTING TREE
- EXISTING BENCHMARK ELEVATION
- EXISTING UTILITY POLE AND LINES
- EXISTING STORM INLET
- EXISTING MANHOLE
- EXISTING WATER VALVE
- EXISTING WATER MAIN REDUCER
- EXISTING FIRE HYDRANT
- EXISTING WATER MAIN TEE
- EXISTING WATER MAIN CROSS
- EXISTING WATER MAIN AND SIZE
- EXISTING SANITARY SEWER AND SIZE
- EXISTING STORM SEWER AND SIZE
- EXISTING GAS MAIN
- EXISTING TELEPHONE
- EXISTING UNDERGROUND ELECTRIC
- EXISTING FORCE MAIN AND SIZE
- EXISTING TV CABLE
- EXISTING UNDERGROUND FIBER OPTIC
- EXISTING TELEPHONE PEDESTAL
- EXISTING ELECTRIC PEDESTAL
- EXISTING CABLE PEDESTAL
- EXISTING FENCELINE
- PROPOSED CURB AND GUTTER
- PROPOSED CONCRETE FLATWORK
- PROPOSED BUILDING LINE
- PROPOSED TREE
- PROPOSED BENCHMARK ELEVATION
- PROPOSED UTILITY POLE AND LINES
- PROPOSED STORM INLET
- PROPOSED MANHOLE
- PROPOSED WATER VALVE
- PROPOSED WATER MAIN REDUCER
- PROPOSED FIRE HYDRANT
- PROPOSED WATER MAIN TEE
- PROPOSED WATER MAIN CROSS
- PROPOSED WATER MAIN
- PROPOSED SANITARY SEWER
- PROPOSED STORM SEWER
- PROPOSED GAS MAIN
- PROPOSED TELEPHONE
- PROPOSED UNDERGROUND ELECTRIC
- PROPOSED FORCE MAIN
- FOUND 3/4" OR SMALLER REBAR/SOLID ROD
- FOUND 1 1/4" REBAR OR SOLID ROD
- FOUND 1" PIPE
- FOUND 1 1/2" - 2" PIPE
- SET 3/4" REBAR
- SET 1 1/4" REBAR
- EXISTING PROPERTY LINES
- PROPOSED PROPERTY LINES
- PROPOSED EASEMENT LINES
- BUILDING SET BACK LINES
- EROSION MAT WisDOT CLASS I, TYPE B

LOT AREA - 152,460 SQ. FT. OR 3.5 ACRES
FLOOR AREA - 26,100 SQ. FT. OR .60 ACRES
FLOOR AREA RATIO - 17.1%
IMPERVIOUS SURFACE AREA - 83,356 SQ. FT. OR 1.91 ACRES
IMPERVIOUS SURFACE RATIO - 54.6%
BUILDING HEIGHT - 19' 1 1/2" AT PEAK OF ROOF, 16' AT EAVES

NORTH
SCALES:
22x34 sheets - 1" = 30'
11x17 sheets - 1" = 60'

EROSION CONTROL DATES:

SITE EXCAVATION	COMMENCE APRIL 1, 2020
TOPSOIL, SEED & MULCH DISTURBED AREAS	COMPLETED SEPTEMBER 1, 2020
SITE STABLIZED/VEGETATION ESTABLISHED	COMPLETED NOVEMBER 1, 2020
BIORETENTION BASIN INSTALLED, SEEDED AND MULCHED	COMPLETED APRIL 5, 2021
BIORETENTION BASIN AREA STABILIZED	COMPLETED JUNE 5, 2021

EROSION CONTROL NOTES:

1. CONTRACTOR SHALL HAVE ALL EROSION CONTROL MEASURES IN PLACE AND APPROVED BY THE ENGINEER PRIOR TO COMMENCEMENT OF EXCAVATION AND ACTIVITIES.
2. EROSION CONTROL MEASURES SHALL COMPLY WITH WISCONSIN ADMINISTRATIVE CODE, COMM CHAPTER 21, UNIFORM DWELLING CODE, AND CHAPTER 65 COMMERCIAL CONSTRUCTION.
3. ALL SILT FENCES SHALL BE INSPECTED DAILY. CLEANING, ADJUSTING AND REPLACING EROSION CONTROL MEAUSRES SHALL BE DONE AS NECESSARY THROUGHOUT CONSTRUCTION. ALL EROSION CONTROL MEASURES SHALL BE IN WORKING CONDITION AT THE END OF EACH WORK DAY.
4. EROSION CONTROL MEASURES SHALL BE INSTALLED PER THE DETAILS IN LOCATIONS DESIGNATED ON THE PLANS, OR AS MAY OTHERWISE BY DIRECTED BY THE ENGINEER.
5. SEDIMENT FROM OVERLAND FLOW SHALL BE PREVENTED FROM LEAVING THE WORK SITE BY INSTALLING SILT FENCING PARALLEL TO THE CONTOURS LOCATED DOWNHILL OF THE WORK SITE.
6. EXISTING VEGETATION SHALL BE REMOVED ONLY TO THE EXTENT NECESSARY TO PERFORM CONSTRUCTION ACTIVITIES. CLEARING OF AREAS THAT ARE CLEARLY OUTSIDE THE LIMITS OF CONSTRUCTION SHALL NOT BE PERMITTED.
7. ALL DISTURBED AREAS SHALL BE RESTORED AND VEGETATED AS SOON AS POSSIBLE AFTER DISTURBANCE. IN GENERAL, STABILIZATION OF DISTURBED AREAS SHALL BE COMPLETED WITHIN 30 DAYS OF THE INITIAL DISTURBANCE, OR WITHIN 7 DAYS OF FINAL GRADING AND TOPSOIL PLACEMENT.
8. REFER TO THE DNR TECHNICAL STANDARDS AVAILABLE AT HTTP://WWW.DNR.STATE.WI.US/ORG/WATER/WM/NPS/STORMWATER/TECHSTDS.HTM.
9. CONTRACTOR SHALL WATER NEWLY SEEDED AREAS IF 7 DAYS PASS WITHOUT A RAINFALL DURING THE FIRST 6 WEEKS AFTER INITITAL STABILIZATION.
10. MULCHING OF DISTURBED AREAS SHALL BE AT A RATE OF 2 TONS PER ACRE. MULCH SHALL BE ANCHORED INTO THE SOIL BY DISCING.
11. AFTER ATTEMPTS TO STABILIZE DISTURBED AREAS WITH SEEDING AND MULCH FAIL, THOSE AREAS SHALL BE TEMPORARILY STABILIZED USING POLYACRYLAMIDE UNDER DIRECTION OF THE ENGINEER.
12. A MINIMUM OF ONE EROSION CONTROL INSPECTION SHALL BE PERFORMED EACH WEEK, AND ONE INSPECTION SHALL BE PERFORMED AFTER ANY RAINFALL EVENT OF 0.5" OR GREATER. ALL REPAIRS OR MODIFICATIONS SHALL BE COMPLETED WITHIN 24 HOURS OF THE INSPECTION.

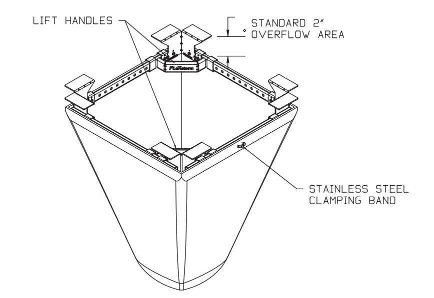

TYPICAL RECTANGULAR INLET FILTER
FRAMED INLET PROTECTION

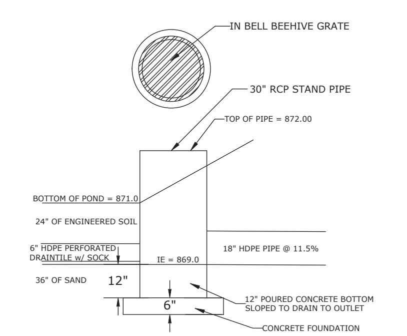

OUTLET STRUCTURE DETAIL
NOT TO SCALE

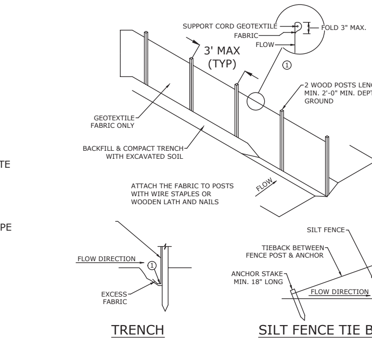

GENERAL NOTES

1. TRENCH SHALL BE A MINIMUM OF 4" WIDE & 6" DEEP TO BURY AND ANCHOR THE GEOTEXTILE FABRIC. FOLD MATERIAL TO FIT TRENCH AND BACKFILL & COMPACT TRENCH WITH EXCAVATED SOIL
2. WOOD POSTS SHALL BE A MINIMUM SIZE OF 1-1/8"x1-1/8" OF OAK OR HICKORY

SILT FENCE DETAIL

NOTE:
ADDITIONAL POST DEPTH OR TIE BACKS MAY BE REQUIRED IN UNSTABLE SOILS AT LOCATIONS AS DIRECTED BY ENGINEER

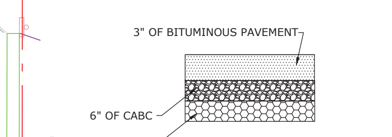

NOTE: COMPACT TO 95% MODIFIED PROCTOR
BITUMINOUS SURFACE SECTION

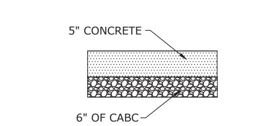

NOTE: COMPACT TO 95% MODIFIED PROCTOR
CONCRETE SECTION

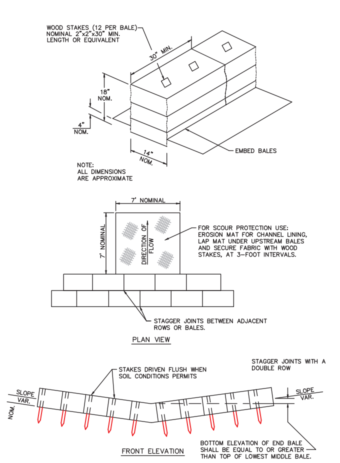

EROSION BALES FOR CHANNEL FLOW

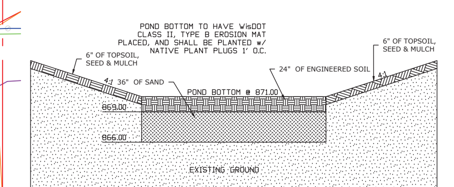

NOTES:
1. ENGINEERED SOIL SHALL CONSIST OF 70 TO 85% COARSE SAND AND 15 TO 30% COMPOST. REFER TO DNR TECHNICAL STANDARD 1004.V.B.6.d
2. SAND SHALL MEET ONE OF THE FOLLOWING; USDA COARSE SAND (.02-.04 INCHES), ASTM C33 (FINE AGGREGATE CONCRETE SAND), OR WI STANDARDS AND SPECIFICATIONSFOR HIGHWAY AND STRUCTURE CONSTRUCTION, SECTION 501.2.5.3.4 (FINE AGGREGATE CONCRETE SAND)

A C102 BIORETENTION BASIN SECTION
NOT TO SCALE

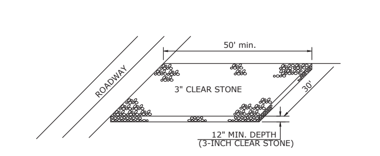

TRACKING PAD
NOT TO SCALE

REVISIONS
9/20/2019
10/10/2019
10/29/2019
12/03/2019
01/30/2020
02/21/2020
1 04/13/2020
2 06/23/2020
3 08/07/2020

EXCLUSIVELY ROSES
STOUGHTON BUSINESS PARK
421 GLACIER MORAINE DR. STOUGHTON, WI 53589
SITE PLAN

ENGINEERING
SURVEYING
ENVIRONMENTAL
(608) 935-3310

ENGINEERING CONSULTANTS, INC.
2600 C.T.H. Y - DODGEVILLE, WI 53533

DATE: 04/09/2020
DESIGNED: MB
DRAFTED: JM
PROJECT #: 19-067

C101

Plotted: 2020-08-07 08:31:15 Filename - s:\eagle point projects\stoughton\exclusively roses\site plan with new grading and added parking.dwg

ORIGINAL APPROVED PLAN

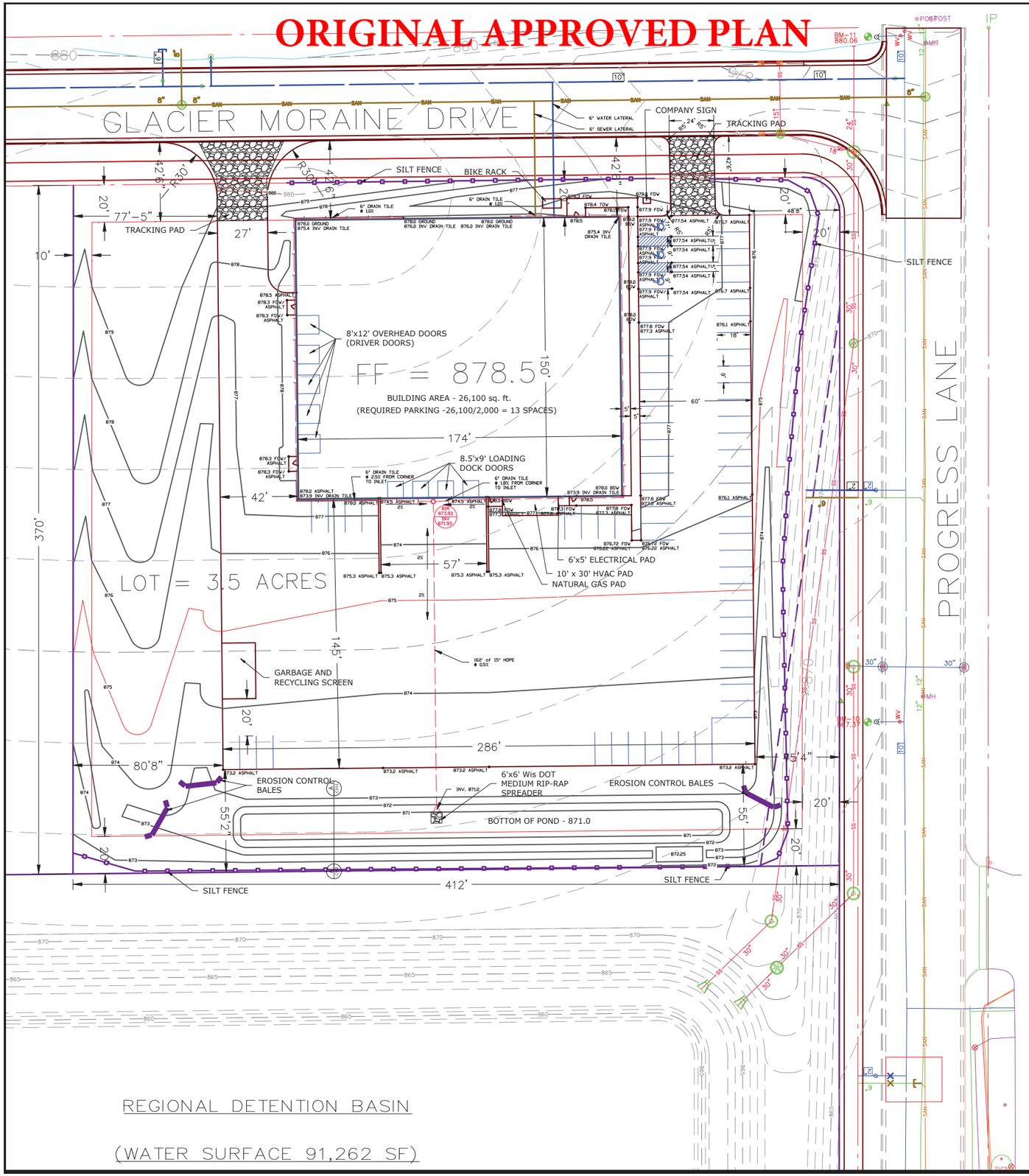

REGIONAL DETENTION BASIN

(WATER SURFACE 91,262 SF)

LEGEND

- EXISTING CURB AND GUTTER
- EXISTING CONCRETE FLATWORK
- EXISTING BUILDING LINE
- EXISTING TREE
- EXISTING BENCHMARK ELEVATION
- EXISTING UTILITY POLE AND LINES
- EXISTING STORM INLET
- EXISTING MANHOLE
- EXISTING WATER VALVE
- EXISTING WATER MAIN REDUCER
- EXISTING FIRE HYDRANT
- EXISTING WATER MAIN TEE
- EXISTING WATER MAIN CROSS
- EXISTING WATER MAIN AND SIZE
- EXISTING SANITARY SEWER AND SIZE
- EXISTING STORM SEWER AND SIZE
- EXISTING GAS MAIN
- EXISTING TELEPHONE
- EXISTING UNDERGROUND ELECTRIC
- EXISTING FORCE MAIN AND SIZE
- EXISTING TV CABLE
- EXISTING UNDERGROUND FIBER OPTIC
- EXISTING TELEPHONE PEDESTAL
- EXISTING ELECTRIC PEDESTAL
- EXISTING CABLE PEDESTAL
- EXISTING FENCELINE
- PROPOSED CURB AND GUTTER
- PROPOSED CONCRETE FLATWORK
- PROPOSED BUILDING LINE
- PROPOSED TREE
- PROPOSED BENCHMARK ELEVATION
- PROPOSED UTILITY POLE AND LINES
- PROPOSED STORM INLET
- PROPOSED MANHOLE
- PROPOSED WATER VALVE
- PROPOSED WATER MAIN REDUCER
- PROPOSED FIRE HYDRANT
- PROPOSED WATER MAIN TEE
- PROPOSED WATER MAIN CROSS
- PROPOSED WATER MAIN
- PROPOSED SANITARY SEWER
- PROPOSED STORM SEWER
- PROPOSED GAS MAIN
- PROPOSED TELEPHONE
- PROPOSED UNDERGROUND ELECTRIC
- PROPOSED FORCE MAIN
- FOUND 3/4" OR SMALLER REBAR/SOLID ROD
- FOUND 1 1/4" REBAR OR SOLID ROD
- FOUND 1" PIPE
- FOUND 1 1/2" - 2" PIPE
- SET 3/4" REBAR
- SET 1 1/4" REBAR
- EXISTING PROPERTY LINES
- PROPOSED PROPERTY LINES
- PROPOSED EASEMENT LINES
- BUILDING SET BACK LINES

LOT AREA - 152,460 SQ. FT. OR 3.5 ACRES
FLOOR AREA - 26,100 SQ. FT. OR .60 ACRES
FLOOR AREA RATIO - 17.1%
IMPERVIOUS SURFACE AREA - 83,356 SQ. FT. OR 1.91 ACRES
IMPERVIOUS SURFACE RATIO - 54.6%
BUILDING HEIGHT - 19' 1 1/2" AT PEAK OF ROOF, 16' AT EAVES

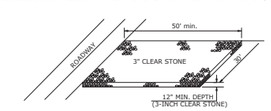

TRACKING PAD
NOT TO SCALE

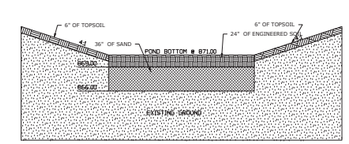

NOTES:
1.SAND TO BE A TYPICAL COARSE SAND WITH AN INFILTRATION RATE OF 3.6"/HR MIN.
2.ENGINEERED SOIL TO BE A LOAMY SAND WITH AN INFILTRATION RATE OF 1.63"/HR MIN.

A BIORETENTION BASIN SECTION
NOT TO SCALE

NORTH
30 0 30
SCALES:
22x34 sheets - 1" = 30'
11x17 sheets - 1" = 60'

EROSION CONTROL NOTES:

1. CONTRACTOR SHALL HAVE ALL EROSION CONTROL MEASURES IN PLACE AND APPROVED BY THE ENGINEER PRIOR TO COMMENCEMENT OF EXCAVATION AND ACTIVITIES.
2. EROSION CONTROL MEASURES SHALL COMPLY WITH WISCONSIN ADMINISTRATIVE CODE, COMM CHAPTER 21, UNIFORM DWELLING CODE, AND CHAPTER 65 COMMERCIAL CONSTRUCTION.
3. ALL SILT FENCES SHALL BE INSPECTED DAILY. CLEANING, ADJUSTING AND REPLACING EROSION CONTROL MEAUSRES SHALL BE DONE AS NECESSARY THROUGHOUT CONSTRUCTION. ALL EROSION CONTROL MEASURES SHALL BE IN WORKING CONDITION AT THE END OF EACH WORK DAY.
4. EROSION CONTROL MEASURES SHALL BE INSTALLED PER THE DETAILS IN LOCATIONS DESIGNATED ON THE PLANS, OR AS MAY OTHERWISE BY DIRECTED BY THE ENGINEER.
5. SEDIMENT FROM OVERLAND FLOW SHALL BE PREVENTED FROM LEAVING THE WORK SITE BY INSTALLING SILT FENCING PARALLEL TO THE CONTOURS LOCATED DOWNHILL OF THE WORK SITE.
6. EXISTING VEGETATION SHALL BE REMOVED ONLY TO THE EXTENT NECESSARY TO PERFORM CONSTRUCTION ACTIVITIES. CLEARING OF AREAS THAT ARE CLEARLY OUTSIDE THE LIMITS OF CONSTRUCTION SHALL NOT BE PERMITTED.
7. ALL DISTURBED AREAS SHALL BE RESTORED AND VEGETATED AS SOON AS POSSIBLE AFTER DISTURBANCE. IN GENERAL, STABILIZATION OF DISTURBED AREAS SHALL BE COMPLETED WITHIN 30 DAYS OF THE INITIAL DISTURBANCE, OR WITHIN 7 DAYS OF FINAL GRADING AND TOPSOIL PLACEMENT.
8. REFER TO THE DNR TECHNICAL STANDARDS AVAILABLE AT HTTP://WWW.DNR.STATE.WI.US/ORG/WATER/WM/NPS/STORMWATER/TECHSTDS.HTM.
9. CONTRACTOR SHALL WATER NEWLY SEEDED AREAS IF 7 DAYS PASS WITHOUT A RAINFALL DURING THE FIRST 6 WEEKS AFTER INITITAL STABILIZATION.
10. MULCHING OF DISTURBED AREAS SHALL BE AT A RATE OF 2 TONS PER ACRE. MULCH SHALL BE ANCHORED INTO THE SOIL BY DISCING.
11. AFTER ATTEMPTS TO STABILIZE DISTURBED AREAS WITH SEEDING AND MULCH FAIL, THOSE AREAS SHALL BE TEMPORARILY STABILIZED USING POLYACRYLAMIDE UNDER DIRECTION OF THE ENGINEER.
12. A MINIMUM OF ONE EROSION CONTROL INSPECTION SHALL BE PERFORMED EACH WEEK, AND ONE INSPECTION SHALL BE PERFORMED AFTER ANY RAINFALL EVENT OF 0.5" OR GREATER. ALL REPAIRS OR MODIFICATIONS SHALL BE COMPLETED WITHIN 24 HOURS OF THE INSPECTION.

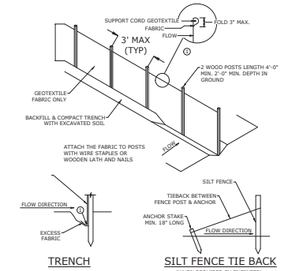

TRENCH

SILT FENCE TIE BACK
(WHEN REQUIRED BY ENGINEER)

NOTE:
8' SPACING ALLOWED IF A WOVEN GEOTEXTILE FABRIC IS USED

GENERAL NOTES

1. TRENCH SHALL BE A MINIMUM OF 4" WIDE & 6" DEEP TO BURY AND ANCHOR THE GEOTEXTILE FABRIC. FOLD MATERIAL TO FIT TRENCH AND BACKFILL & COMPACT TRENCH WITH EXCAVATED SOIL
2. WOOD POSTS SHALL BE A MINIMUM SIZE OF 1-1/8"x1-1/8" OF OAK OR HICKORY

SILT FENCE DETAIL

NOTE:
ADDITIONAL POST DEPTH OR TIE BACKS MAY BE REQUIRED IN UNSTABLE SOILS AT LOCATIONS AS DIRECTED BY ENGINEER

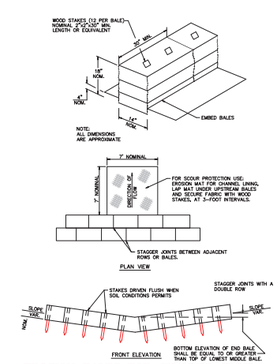

EROSION BALES FOR CHANNEL FLOW

REVISIONS
9/20/2019
10/10/2019
10/29/2019

Exclusively Roses
Stoughton Business Park
421 Glacier Moraine Drive Stoughton, WI
Site Plan

ENGINEERING CONSULTANTS, INC.
ENGINEERING
SURVEYING
ENVIRONMENTAL
(608) 935-3310
2800 C.T.H. Y - DODGEVILLE, WI 53533

DATE: 8/21/19
DESIGNED:
DRAFTED:
PROJECT #: 19-067

C 101

Plotted: 2019-10-29 12:50:36 Filename - s:\eagle point projects\stoughton\exclusively roses\site plan with new grading.dwg

Exclusively Roses, Inc.
221 Business Park Circle
Stoughton, WI 53589

Re: 421 Glacier Moraine Drive **August, 2020**

To whom it may concern,

We are proposing to add an additional 18' x 150' asphalt parking area along the west side of the parking lot to help accommodate our seasonal spikes when we rent delivery vans. With the 16 additional stalls, it will help us still allow for employee parking in our lot and avoid excessive street parking use. Please call or email Bradford Anderson with additional questions or concerns.

Bradford Anderson

Bradford Anderson

Vice President, Exclusively Roses, Inc.

608-877-8879

CITY OF STOUGHTON
DEPARTMENT OF
PLANNING & DEVELOPMENT
207 S. Forrest Street, Stoughton, WI. 53589

(608) 873-6619 www.ci.stoughton.wi.us

RODNEY J. SCHEEL
DIRECTOR

August 14, 2020

Davis Steel Buildings, Inc.
Jeff Davis
3482 Orvold Park Dr,
McFarland, WI 53558

Dear Mr. Davis:

I have completed a review of the proposed parking lot and stormwater expansion for Exclusively Roses, 421 Glacier Moraine Drive, Stoughton, WI. 53589 – plans received 8/13/20. As noted, additional information may be required to be provided or shown on the plan.

1. The property at 421 Glacier Moraine Drive is zoned PI – Planned Industrial. **A letter summarizing the proposed expansion is needed.**

2. Light industrial land uses are defined as follows: "Light industrial land uses are industrial facilities at which all operations (with the exception of loading operations): 1) are conducted entirely within an enclosed building; 2) are not potentially associated with nuisances such as odor, noise, heat, vibration, and radiation which are detectable at the property line; 3) do not pose a significant safety hazard (such as danger of explosion); and 4) comply with all of the performance standards listed for potential nuisances in article VII. **The proposed use meets these requirements.**

   Applicable Regulations: All activities, except loading and unloading, shall be conducted entirely within the confines of a building. **The proposed expansion will meet this requirement.**

   Parking requirements: One space per each employee on the largest work shift. **Sixty employees require sixty parking spaces. Eighty-two spaces are provided. The street cannot be used for required parking.**

3. Indoor Storage and wholesaling land uses are defined as follows: "Indoor storage and wholesaling land uses are primarily oriented to the receiving, holding, and shipping of packaged materials for a single business or a single group of businesses. With the

exception of loading and parking facilities, such land uses are contained entirely within an enclosed building. Examples of this land use include conventional warehouse facilities, long-term indoor storage facilities, and joint warehouse and storage facilities".
The use meets this description.

Parking requirements: One space per 2,000 sf of gross floor area. **The primary use is light industrial. See #3 above.**

4. The parking aisle width for 90 degree parking shall be a minimum of 24 feet. **The plan meets this requirement.**

5. Handicap parking spaces shall be installed at a size, number, location, and with signage as specified by state and federal regulations. **Three handicap stalls are shown.**

6. Except for handicap parking stalls, the minimum parking stall length shall be 18 feet with a minimum width of 9 feet. **The plan meets this requirement.**

7. Per section 78-704 (13) (a), bicycle parking is required equal to 10% of the automobile parking space requirement. **Six bike spaces are required. The bike rack is shown on the plan.**

8. All off-street parking and traffic circulation areas shall be completed prior to building occupancy and shall be maintained in a dust-free condition at all times. In no instance or manner shall any off-street parking or traffic circulation area be used as a storage area, except as provided for by section 78-706. **Outdoor storage is not planned for this site and is not allowed without a conditional use permit.**

9. Off-street parking and traffic circulation design standards.
   (a) Surfacing and marking. All off-street parking and traffic circulation areas shall be paved with a hard, all-weather surface, to the satisfaction of the director of planning and development. Said surfaces intended for six or more parking stalls shall be marked in a manner which clearly indicates required parking spaces. **Expected**

10. The minimum paved surface setback from a side lot line is 5 feet while the minimum is 10 feet from a right-of-way line. **The plan meets these requirements.**

11. Off-street loading stall requirements per section 78-705. **There is ample room for loading. Backing into and from the street is not allowed.**

12. The proposed use is consistent with the Comprehensive Plan Planned Land Use Map.

13. A landscaping plan which meets the requirements of Article VI of the zoning code will need to be provided. **<u>The original approved plan will need to be updated to take into account the added paved area.</u>**

14. Exterior lighting standards.
    All off-street parking areas shall be lit to ensure safe and efficient use. An illumination level of between 0.4 and 1.0 footcandles are recommended and said illumination shall not exceed the standards of section 78-707. The maximum lighting as measured at the property line is 0.5 footcandles. The maximum average on-site lighting shall be 2.4 footcandles. The maximum fixture height shall be 25 feet from grade. The minimum lighting standard for parking areas used after sunset shall be 0.2 foot-candles. The lighting element shall not be visible from the residentially zoned properties to the north. **A compliant photometric plan has been provided.**

15. The minimum landscape surface ratio is 25 %. **The site meets this requirement.**

16. An updated stormwater management plan has been provided for review.

If you have any questions, please contact me at 608-646-0421.

Sincerely,
City of Stoughton

Michael P. Stacey

Michael P. Stacey
Zoning Administrator/Assistant Planner