CITY OF STOUGHTON
DEPARTMENT OF
PLANNING & DEVELOPMENT
207 S. Forrest Street, Stoughton, WI. 53589

(608) 873-6619 www.ci.stoughton.wi.us

RODNEY J. SCHEEL
DIRECTOR

Date: October 2, 2020

To: Plan Commissioners

From: Rodney J. Scheel
Director of Planning & Development

Michael P. Stacey
Zoning Administrator/Assistant Planner

Subject: Agenda Item for the October 12, 2020 Plan Commission Meeting

Request by William Montelbano for renovation project approval at Fosdal's Baker, 243 E. Main Street.

Originally this request was to demo a portion of the rear of the building and construct an addition in its place. A public hearing is required for a project like this, so that is still scheduled to take place. The request has been changed instead to a renovation and repair project for a portion of the rear of the building. Additionally, a handicap accessible ramp and railing is proposed for the front of the building. Plan Commission approval is necessary for this proposed renovation. The resolution, application information, and staff review are provided.

CITY OF STOUGHTON, 207 S. FORREST STREET, STOUGHTON, WISCONSIN

RESOLUTION OF THE PLAN COMMISSION

Approving a Renovation Project for Fosdal's Bakery, 243 E. Main Street, Stoughton, WI.

Committee Action: Plan Commission approves the request – 0

Fiscal Impact:

File Number:	R - 22 - 2020	**Date Introduced:**	October 12, 2020

RECITALS

A. Fosdal's Baker (the "Applicant") is seeking approval for a renovation project at 234 E. Main Street in the City of Stoughton, Dane County, Wisconsin (the "Property").

B. The Property is zoned Central Business and is within the Downtown Design Overlay Zoning District (DDOZD).

C. The City Plan Commission reviewed and discussed the proposed renovation project at their regular October 12, 2020 meeting and found that the project meets the intent of the DDOZD requirements and Comprehensive Plan.

RESOLUTION

BE IT RESOLVED, the City of Stoughton Plan Commission approves the renovation project at 243 E. Main Street, Stoughton, WI, with the following conditions:

- A building permit is required prior to the start of the project.

_____

Mayor Tim Swadley Date
Planning Commission Chair

NOTICE OF PUBLIC HEARING

The City of Stoughton Plan Commission will hold a **Virtual Public Hearing** on **Monday, October 12, 2020** at **6:00 o'clock p.m.,** or as soon after as the matter may be heard, to consider a proposed application by William Montelbano, for a Downtown Design Overlay Zoning District structural project at 243 E. Main Street as follows:

The project consists of replacing an existing wood frame addition of approximately 350 square feet on the alley level and 325 square feet on the Main Street level with a new masonry and wood addition of approximately 445 square feet on the alley level and 530 square feet on the Main Street level. The addition will provide more space for storage and production of baked goods in a much more substantial structure. The only alteration on Main Street will be a concrete ramp at the front entrance which will improve public access for wheelchairs and strollers.

Due to the COVID-19 Pandemic, this meeting will not be open to the public in an in-person capacity. For those wishing to view the meeting and/or ask questions, you may do so via the following options:

Please join my meeting from your computer, tablet or smartphone.

https://global.gotomeeting.com/join/496159885

You can also dial in using your phone.
(For supported devices, tap a one-touch number below to join instantly.)

United States (Toll Free): 1 877 309 2073
- One-touch: tel:+18773092073,,496159885#

United States: +1 (646) 749-3129
- One-touch: tel:+16467493129,,496159885#

Access Code: 496-159-885

New to GoToMeeting? Get the app now and be ready when your first meeting starts:
https://global.gotomeeting.com/install/496159885

If you wish to speak at or have your comments read aloud at the meeting, please register at http://speak.cityofstoughton.com by 5:45 on the day of the meeting. The Clerk will the receive comments and forward them on to the "Organizer". The public can click on the link or call in and use the access code. When connected the public will have to identify themselves in order for the "Organizer" to rename them on the "Attendee" screen. If you plan to speak, please mute TV or stream volume (if online) and do not use speakerphone, as it creates feedback, there may be a delay. The Public Comment participant will be unmuted by the "Organizer" when it is their turn and have up to 3 minutes to speak. After speaking, the "Organizer" will mute the Public Comment participant. The participant can log out or hang up and stream at WSTO, or watch on Channel 981 on Charter/Spectrum.

For questions regarding this notice please contact Michael Stacey, Zoning Administrator at 608-646-0421

Published September 17 and September 24, 2020 Hub

Bill Montelbano Architect AIA

ARCHITECTURE INTERIORS PLANNING ENGINEERING

September 28th, 2020

Michael Stacey
Zoning Administrator
City of Stoughton
207 S. Forrest St.
Stoughton, WI. 54589

Michael,

Our zoning and Downtown Design Overlay District applications are attached including existing and proposed building plans, Main Street and alley exterior elevations and photos of the Main Street and alley facades..
The project consists of repairing and recladding the existing wood frame addition poorly constructed in 1985 of approximately 350 square feet at the rear of the bakery adjacent to the alley.

A few structural repairs are necessary but will not affect the exterior appearance.
The three exposed existing exterior walls will be clad with 4" vinyl siding with matching corner trim.
The existing door will be replaced with a steel door and frame painted to match the siding.

The only alteration on Main Street will be a concrete ramp at the front entrance which will improve public access for wheelchairs and strollers. Simple pipe handrails will be painted brown/red color to match the existing canopy.

Sincerely,

Bill Montelbano

5590 Reeve Road, Mazomanie, Wisconsin 53560-0123 608-795-4540 Email: billmontelbano@gmail.com

Bill Montelbano Architect AIA

ARCHITECTURE INTERIORS PLANNING ENGINEERING

September 28th, 2020

Conformance with the Downtown Design Overlay District design standards according to section 78-517(7) follows:

a. *Building Setback* **The street or front setback is not changing from the existing structure however a concrete ramp for handicap accessibility is proposed.**

b. *Building Height..* **The building height will remain the same.**

c. *Building Width.* **The 22-foot building width will remain the same.**

d. *Horizontal Bands* **The existing storefront is not changing.**

e. *Building Proportion.* **No changes planned.**

f. *Vertical and Solids & Voids Rhythms.* **No changes planned.**

g. *Roof Forms* **No changes planned.**

h. *Exterior Materials.* **4" horizontal vinyl siding is proposed for the 2 exterior walls in accordance with the standards;** "Thin board textured vinyl clapboard siding may be appropriate, particularly if the proposed non-masonry exterior was originally used on the building".

j. *Exterior Surfaces.* **See "h" above.**

k. *Awnings.* **No changes planned.**

l. *Exterior Colors.* **See colored rendering..**

m. *Exterior Lighting.* **See rendering and specifications**.

n. *Signage.* **The existing wood sign will be restored.**

5590 Reeve Road, Mazomanie, Wisconsin 53560-0123 608-795-4540 Email: billmontelbano@gmail.com

City of Stoughton Downtown Design Overlay Zoning District Procedures per Section 78-517

Applicant Name: BILL MONTELBANO (ARCHITECT)

Applicant Address: 5590 REEVE RD. MAZOMANIE, WI 53560

Applicant Phone and Email: 608-795-4540 BILLMONTELBANO@GMAIL.COM

Property Owner Name (if different than applicant): FOSDAL BAKERY LLC. JOE CRUBAUGH

Property Owner Phone and Email: 608-873-3073

Subject Property Address: 243 E. MAIN ST.

Prior to submitting the final application with the Zoning Administrator, the Applicant shall submit an initial draft application for staff review at least 3 weeks prior to a Planning Commission meeting, followed by one revised draft final application packet if necessary based upon staff review or staff comments. Final application materials are required to be submitted at least 2 weeks prior to a Plan Commission meeting.

Initial Packet
(1 electronic 11 x 17 copy of plans to Zoning Administrator) Date: _____

Final Packet (if necessary)
(1 electronic 11 x 17 copy of plans to Zoning Administrator) Date: _____

This form is designed to be used by the Applicant as a guide to submitting a complete application for a downtown design overlay zoning review *and* by the City to process said application. Follow specific requirements depending on the type of proposal as follows:

Maintenance: Maintenance shall be subject to approval by the Zoning Administrator. Maintenance includes preserving or repairing the existing exterior with the same colors, finishes or materials and may require a building/zoning permit and fee.

Renovations: Renovations are subject to Plan Commission approval as set forth in zoning code section 78-517. Renovations include a change in appearance of a structure such as component or signage substitution; painting, roofing, siding with different colors, finishes or materials. Applications for renovation review shall be accompanied by all of the following:

1. A building/zoning permit application (if required).
2. A clear depiction of the existing appearance of the property including color photographs including scaled or fully dimensioned drawings of existing components such as windows, doors, railings, fencing or other site components and detailed building elevations proposed for alteration or replacement.

Google Maps 243 E Main St

EXISTING FRONT

Stoughton, Wisconsin

Google

Street View

EXISTING REAR

WM
WASTE MANAGEMENT
888 960 0008
PULL AHEAD
ACCEPTED MATERIALS: GLASS, TIN, ALUM
PLASTIC (1 - 7), CARDBOARD, MIXED PAPER AN

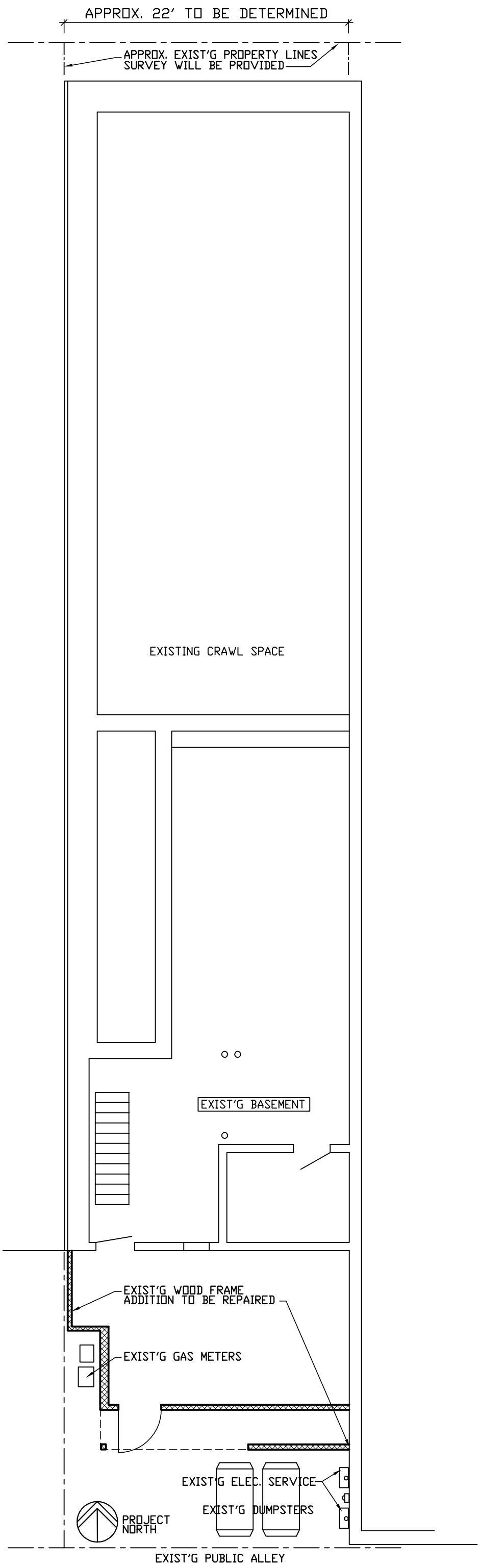

BASEMENT PLAN
SCALE: 1/8"=1'-0"

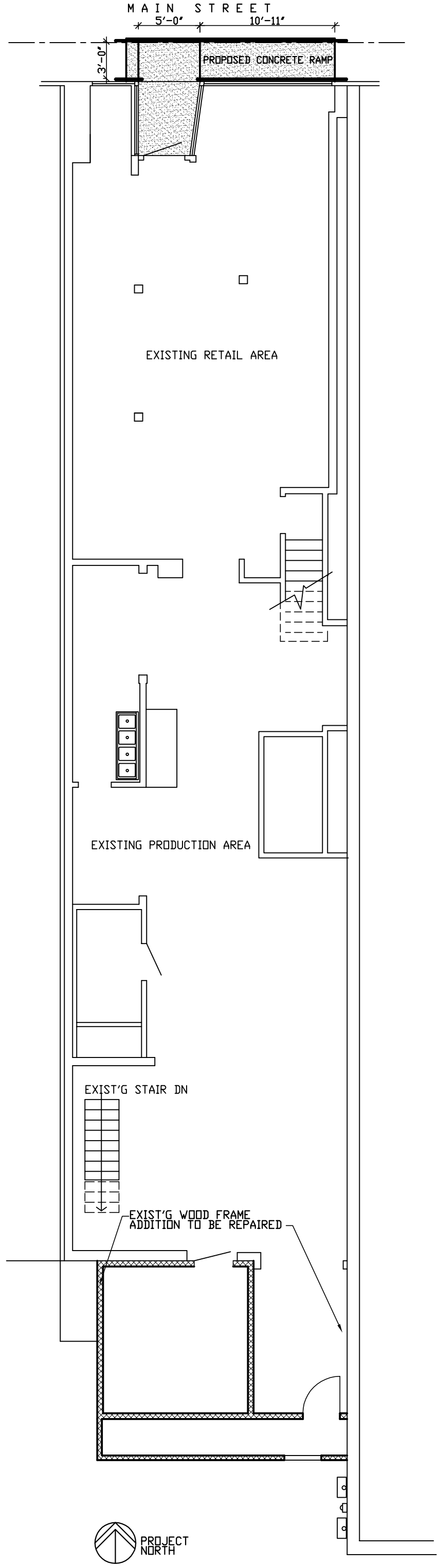

FIRST FLOOR PLAN
SCALE: 1/8"=1'-0"

FOSDAL BAKERY ADDITION
243 E. MAIN STREET STOUGHTON, WI.
BILL MONTELBAND ARCHITECT 5590 REEVE RD. MAZOMANIE, WI.

EXISTING SOUTH ELEVATION
SCALE: 1/8"=1'-0"

EXISTING NORTH ELEVATION
SCALE: 1/8"=1'-0"

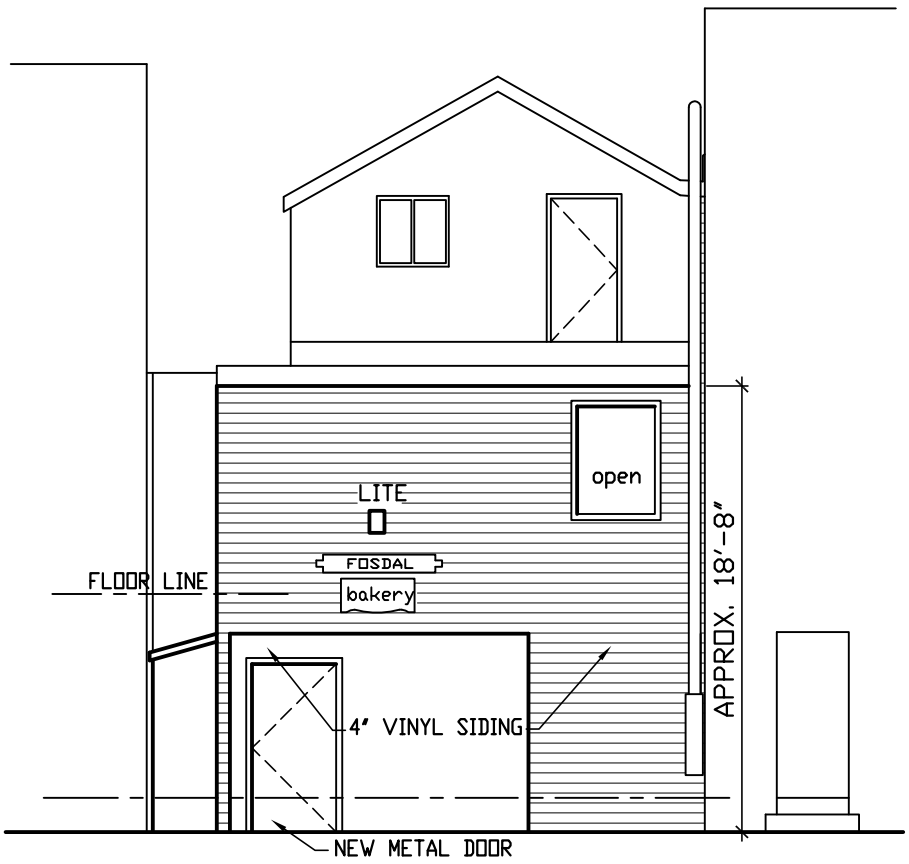

PROPOSED SOUTH ELEVATION
SCALE: 1/8"=1'-0"

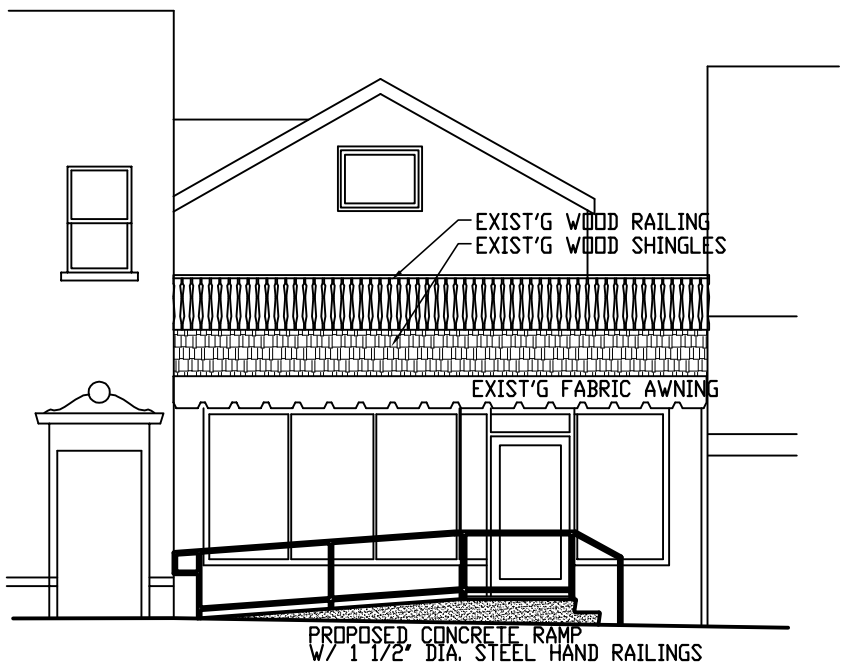

PROPOSED NORTH ELEVATION
SCALE: 1/8"=1'-0"

FOSDAL BAKERY ADDITION
243 E. MAIN STREET STOUGHTON, WI.
BILL MONTELBAND ARCHITECT 5590 REEVE RD. MAZOMANIE, WI.

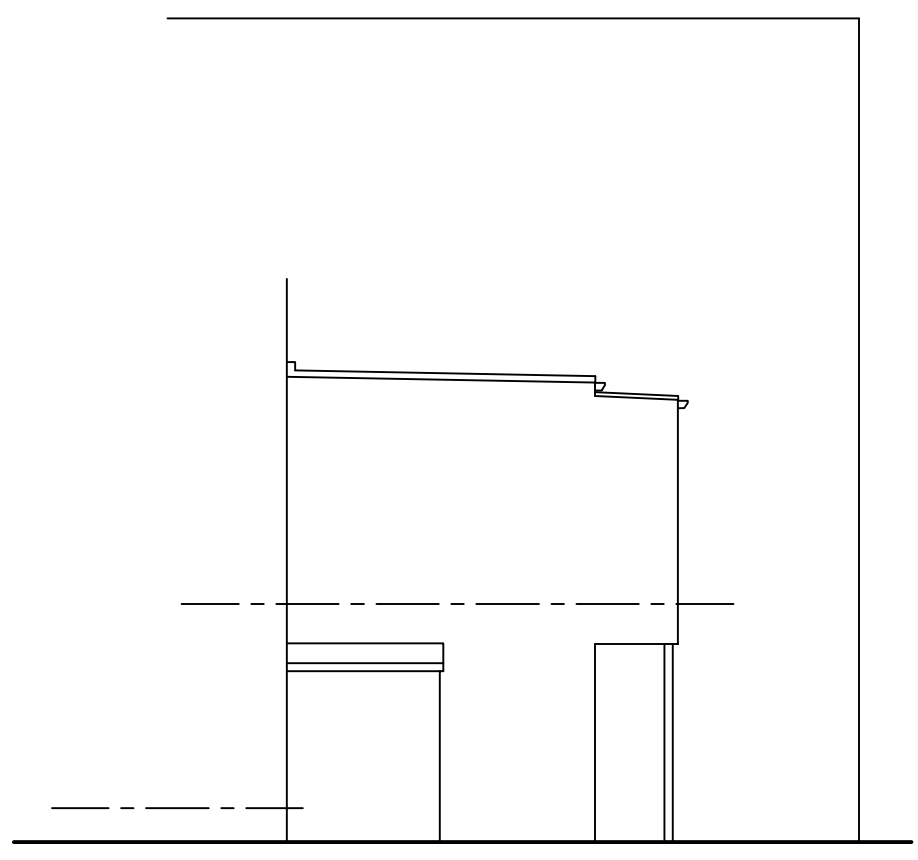

EXISTING WEST ELEVATION

SCALE: 1/8"=1'-0"

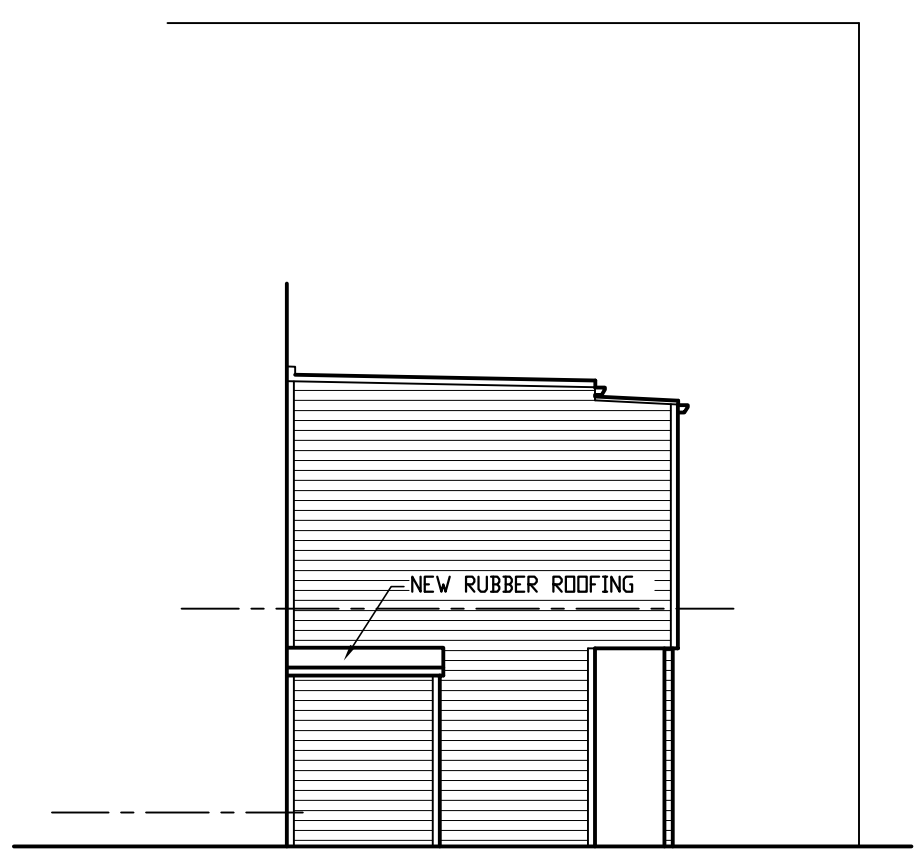

PROPOSED WEST ELEVATION

SCALE: 1/8"=1'-0"

FOSDAL BAKERY ADDITION

243 E. MAIN STREET STOUGHTON, WI.

BILL MONTELBANO ARCHITECT 5590 REEVE RD. MAZOMANIE, WI.

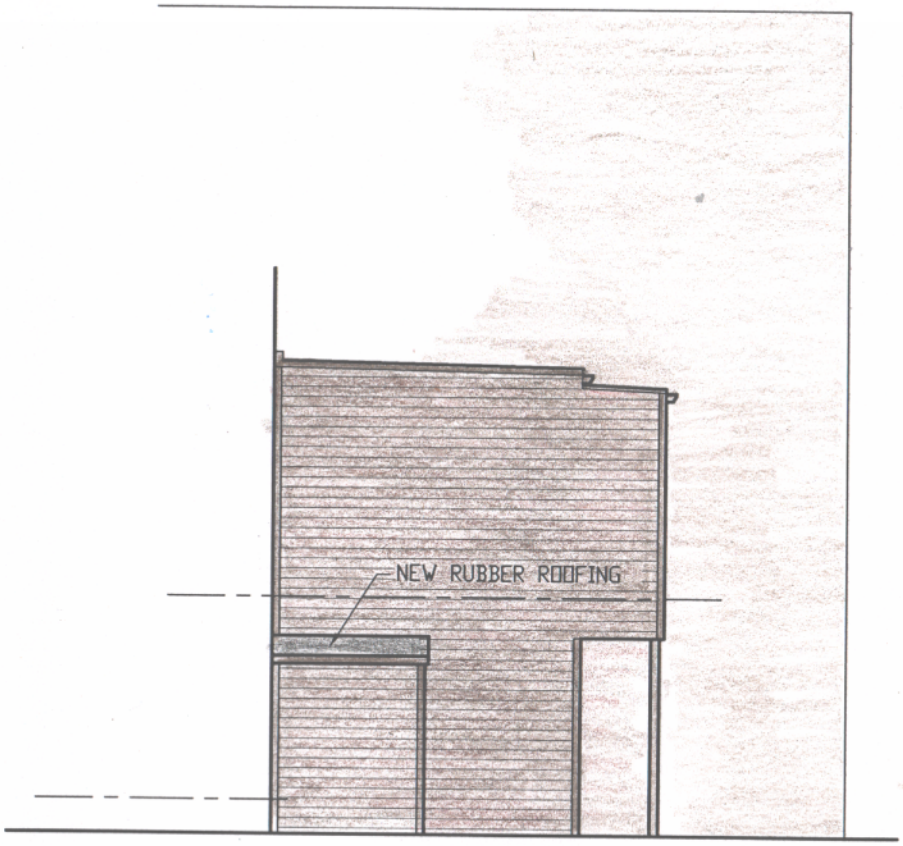

PROPOSED WEST ELEVATION

SCALE: 1/8"=1'-0"

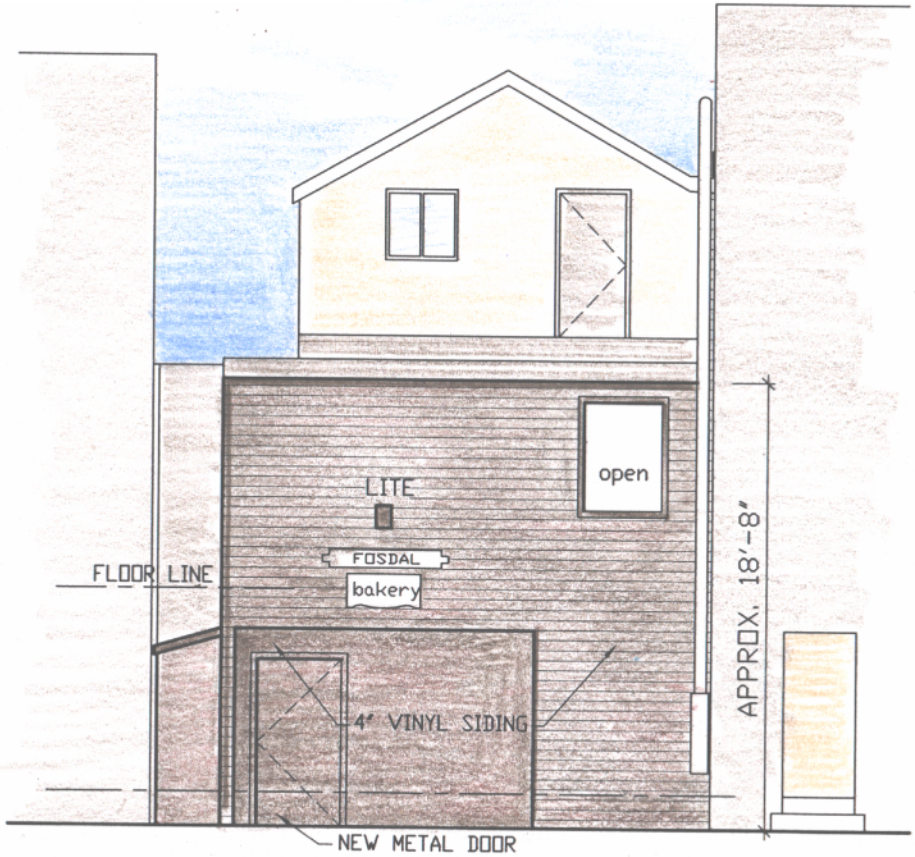

PROPOSED SOUTH ELEVATION

SCALE: 1/8"=1'-0"

FOSDAL BAKERY ADDITION

243 E. MAIN STREET STOUGHTON, WI.

BILL MONTELBAND ARCHITECT 5590 REEVE RD. MAZOMANIE, WI.

CEDAR COLORS >

Octans

LED Adjustable Sconce

Fosdal Bakery Remodel
Project

OSA1030MV40BZ
Catalog

W1
Type

9-22-20
Date

Product Description

The Octans LED Adjustable Sconce provides uniform light distribution with optimal output up to 118 lumens per watt in a compact, seamless design. Using a separable hinged backplate, the Octans is easy to install on walls or directly to a J-Box, and is adjustable from 0 to 90-degrees. It is an economical and efficient replacement for a traditional wall pack and is ideal for accent or general purpose exterior lighting. The Octans can also be used as a flood light for certain applications.

Construction
- Die-cast aluminum housing
- (4) ½" knockouts for conduit feeder
- Toolless separable hinged backplate for easy installation and maintenance
- Adjustable range of 0° to 90°
- UV- and fire-resistant lens
- Stainless steel hardware

Optical System
- Clear injection-molded acrylic creates uniform light distribution while maximizing lumen output
- Utilizes advanced LED technology with CCT of 4000K, and 5000K
- CRI 80+

Electrical
- Thermally-protected, high-efficiency driver
- Operating temperature rating of -4° to 104°F (-20°C to 40°C)
- Input voltage of 120-277VAC
- Available in 30, 50, 80, & 120 watt
- Driver delivers full-range dimming from 0 - 10VDC on 80W and 120W

Finish
- Fine-textured, UV-stabilized powder coat bronze, or white finish

Mounting and installation
- Separable hinged backplate to allow for easy mounting
- Fixture mounts directly to J-Boxes and walls with screws
- For installations where power surge may be possible, NICOR recommends installing additional surge protection at the electrical distribution panel

Listings
- LM-79, LM-80 testing performed in accordance with IESNA standards
- UL and CUL Listed for wet locations
- Meets FCC Part 15, Subpart B, Class B standards for conducted and radiated emissions
- TM-21 Reported L70(9k) life >54,000 hours
- TM-21 Projected L70(9k) life =75,000 hours

Warranty
- 5-year limited system warranty standard
- Warranty does not cover product failure due to an overvoltage event (power surge)

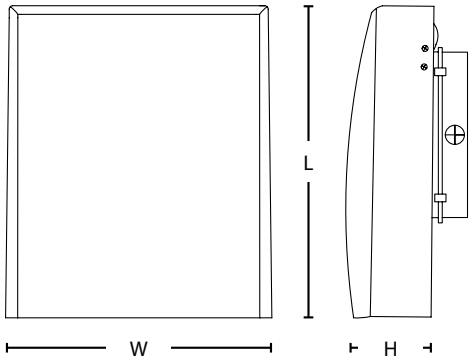

	30/50 W	80/120 W
Fixture Length:	11 in (280 mm)	13 in (330 mm)
Fixture Width:	7.6 in (193 mm)	11 in (280 mm)
Fixture Height:	4.5 in (114 mm)	5.5 in (140 mm)

Photometric Data

OSA30 5000K

Input Voltage (VAC)	120-277
System Level Power (W)	27.9
120V Current (A)	0.24
277V Current (A)	0.11
Delivered Lumens (Lm)	3298
System Efficacy (Lm/W)	118.3
Correlated Color Temp (K)	5246
Color Rendering Index (CRI)	83
Horizontal Beam Angle	101.7°
Vertical Beam Angle	91.8°
Spacing Criteria	1.30

Intensity Summary (Candle Power)

Angle	Mean CP
0	1343
5	1328
15	1252
25	1137
35	967
45	761
55	533
65	307
75	131
85	41
90	21

CCT Data Multiplier

OSA1030MV40	0.982

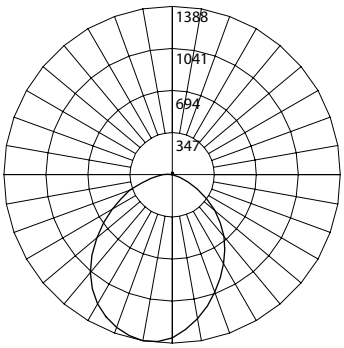

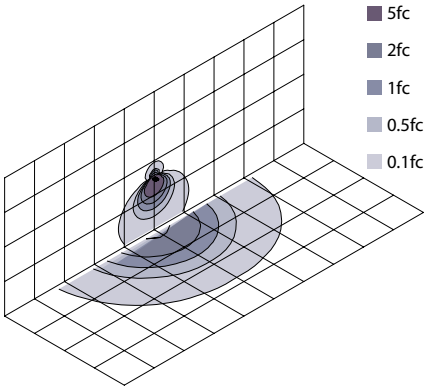

Each square represents 100 square feet.

Zonal Lumen Summary

Zone	Lumens	% of Luminaire
0-30	1011	30.6%
0-40	1624	49.2%
0-60	2709	82.2%
0-90	3230	97.9%
90-180	68	2.1%
0-180	3298	100.0%

OSA50 5000K

Input Voltage (VAC)	120-277
System Level Power (W)	48.2
120V Current (A)	0.41
277V Current (A)	0.18
Delivered Lumens (Lm)	5287
System Efficacy (Lm/W)	109.8
Correlated Color Temp (K)	5100
Color Rendering Index (CRI)	84
Horizontal Beam Angle	99°
Vertical Beam Angle	89.7°
Spacing Criteria	1.26

Intensity Summary (Candle Power)

Angle	Mean CP
0	2299
5	2287
15	2178
25	1952
35	1634
45	1244
55	819
65	423
75	165
85	54
90	30

CCT Data Multiplier

OSA1050MV40	0.947

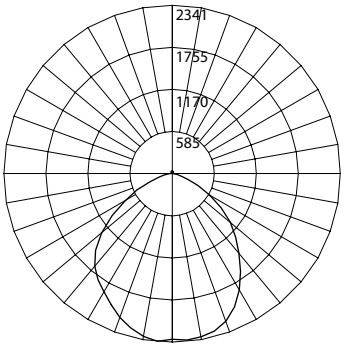

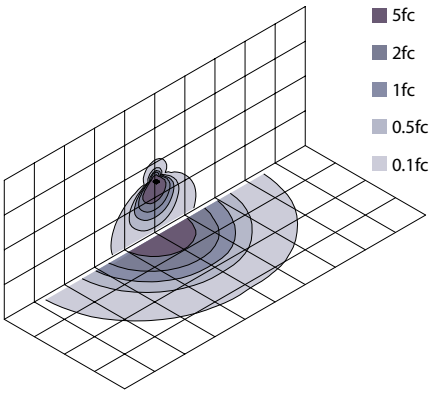

Each square represents 100 square feet.

Zonal Lumen Summary

Zone	Lumens	% of Luminaire
0-30	1730	32.7%
0-40	2753	52.1%
0-60	4464	84.4%
0-90	5162	97.6%
90-180	125	2.4%
0-180	5287	100.0%

Fixture tested per LM-79-08. Photometric data is of the performance of a representative fixture. Results may vary in the field.

Photometric Data

OSA80 5000K

Input Voltage (VAC)	120-277
System Level Power (W)	80.4
120V Current (A)	0.67
277V Current (A)	0.30
Delivered Lumens (Lm)	9241
System Efficacy (Lm/W)	114.9
Correlated Color Temp (K)	5176
Color Rendering Index (CRI)	84
Horizontal Beam Angle	95.5°
Vertical Beam Angle	79.2°
Spacing Criteria	1.24

Intensity Summary (Candle Power)

Angle	Mean CP
0	4157
5	4133
15	3972
25	3557
35	2881
45	2099
55	1341
65	725
75	302
85	89
90	46

CCT Data Multiplier

OSA1080MV40	0.980

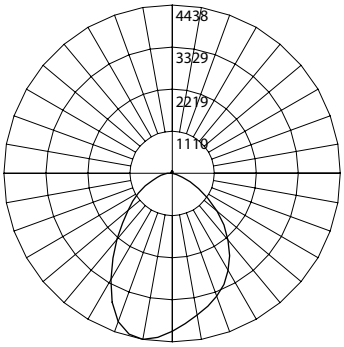

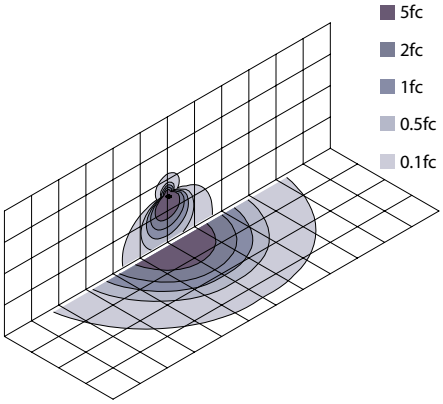

Each square represents 10 square feet.

Zonal Lumen Summary

Zone	Lumens	% of Luminaire
0-30	3160	34.2%
0-40	4971	53.8%
0-60	7833	84.8%
0-90	9041	97.8%
90-180	200	2.2%
0-180	9241	100.0%

OSA120 5000K

Input Voltage (VAC)	120-277
System Level Power (W)	123.8
120V Current (A)	1.04
277V Current (A)	0.45
Delivered Lumens (Lm)	14227
System Efficacy (Lm/W)	114.9
Correlated Color Temp (K)	5158
Color Rendering Index (CRI)	84
Horizontal Beam Angle	97.6°
Vertical Beam Angle	84.8°
Spacing Criteria	1.34

Intensity Summary (Candle Power)

Angle	Mean CP
0	5685
5	5696
15	5668
25	5272
35	4441
45	3333
55	2186
65	1163
75	476
85	140
90	69

CCT Data Multiplier

OSA1120MV40	0.970

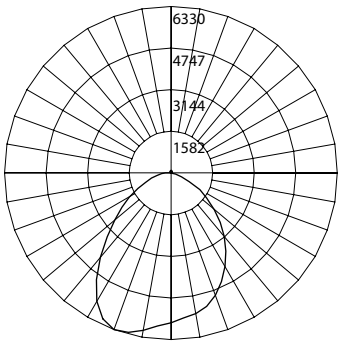

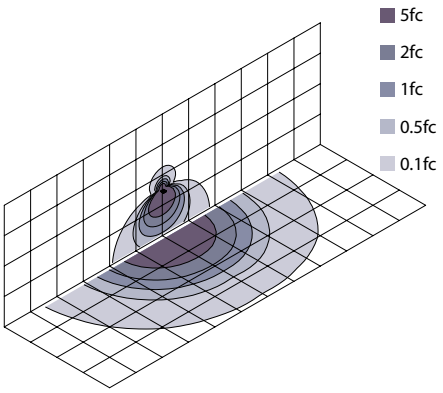

Each square represents 10 square feet.

Zonal Lumen Summary

Zone	Lumens	% of Luminaire
0-30	4596	32.3%
0-40	7402	52.0%
0-60	12004	84.4%
0-90	13932	97.9%
90-180	295	2.1%
0-180	14227	100.0%

Fixture tested per LM-79-08. Photometric data is of the performance of a representative fixture. Results may vary in the field.

Performance Data

Model Number	Lumens	Watts	Lumens/Watt	BUG Rating at 0°
OSA1030MV40	3239	27.9	116.1	B2-U3-G1
OSA1030MV50	3298	27.9	118.3	B2-U3-G1
OSA1050MV40	5193	48.2	107.8	B2-U3-G1
OSA1050MV50	5287	48.2	109.8	B2-U3-G1
OSA1080MV40	9056	80.4	112.6	B3-U3-G2
OSA1080MV50	9241	80.4	114.9	B3-U3-G2
OSA1120MV40	13796	123.8	111.4	B3-U3-G3
OSA1120MV50	14227	123.8	114.9	B3-U3-G3

Recommended 0-10VDC Dimmers*

Lutron NTSTV
Lutron DVSTV
Cooper SF10P
Legrand RH4FBL3PW

**Not a complete list. Check compatibility before installation.*

Ordering Information

Example: OSA1030MV50BZ

Series	Version	Wattage	Voltage	CCTs	Finish
OSA	**1** (Version 1)	● **030** (30 W)	**MV** (120-277)	● **40** (4000 K)	● **BZ** (Bronze)
		○ **050** (50 W)		○ **50** (5000 K)	○ **WH** (White)
		○ **080** (80 W)			
		○ **120** (120 W)			

Specifications and dimensions subject to change without notice.

This device complies with part 15 of the FCC Rules. Operation is subject to the following two conditions: (1) This device may not cause harmful interference, and (2) this device must accept any interference received, including interference that may cause undesired operation.

NOTE: This equipment has been tested and found to comply with the limits for a Class B digital device, pursuant to part 15 of the FCC Rules. These limits are designed to provide reasonable protection against harmful interference in a residential installation. This equipment generates, uses and can radiate radio frequency energy and, if not installed and used in accordance with the instructions, may cause harmful interference to radio communications. However, there is no guarantee that interference will not occur in a particular installation. If this equipment does cause harmful interference to radio or television reception, which can be determined by turning the equipment off and on, the user is encouraged to try to correct the interference by one or more of the following measures:

—Reorient or relocate the receiving antenna.
—Increase the separation between the equipment and receiver.
—Connect the equipment into an outlet on a circuit different from that to which the receiver is connected.
—Consult the dealer or an experienced radio/TV technician for help.

CITY OF STOUGHTON
DEPARTMENT OF
PLANNING & DEVELOPMENT
207 S. Forrest Street, Stoughton, WI. 53589

(608) 873-6619 www.ci.stoughton.wi.us

RODNEY J. SCHEEL
DIRECTOR

September 29, 2020

Architect AIA
Bill Montelbano
5590 Reeve Road
Mazomanie, WI. 53560-0123

Dear Mr. Montelbano:

I have completed a final review of the proposed renovation project at 243 E. Main Street, Stoughton, WI. – Information received 9/28/2020. This project has been changed from the original (structural project) plan to demo a portion of the rear of the building and install an addition in its place. The current request is for a renovation project. A public hearing which is required for structural projects is still scheduled for October 12, 2020.

1. The property at 243 E. Main Street is zoned CB – Central Business and is within the Downtown Design Overlay Zoning District (DDOZD). The property is not a local landmark and is not contributing to the Main Street Historic District.

2. A *structural project* is defined as work involving modification to the physical configuration of an existing building or structure (such as remodeling) or the construction of a new structure (such as the erection of a new building or structure, the addition or removal of bulk to an existing building or structure, and includes the removal or destruction of any façade of a building or structure). **The request is now considered a renovation project.**

3. *Structural Projects*. Structural Project applications shall be subject to approval by the Plan Commission. Before acting on an application for a Structural Project, the Plan Commission shall conduct a public hearing on the application, which shall be preceded by publication of a Class 2 Notice. The Plan Commission shall approve an application for a Structural Project if the applicant demonstrates that the proposed Structural Project will conform to the standards set forth in section 78-517(7). **(A scheduled public hearing is planned for October 12, 2020 per the initial application)**

4. *Renovation* means work involving a change in the appearance of a building or structure (such as architectural component or signage substitution or painting, roofing, siding, with different colors, finishes, or materials).

5. *Renovation.* Renovations shall be subject to approval by the plan commission. The plan commission shall approve an application for renovation if the proposed renovation will conform to the standards set forth in section 78-517(7). Applications for approval of renovation shall be made to the zoning administrator, and shall be accompanied by all of the following:
    a. The building permit application if such an application is required. **Prior to construction**
    b. A clear depiction of the existing appearance of the property including clear color photographs. Scaled or fully dimensioned drawings of existing components such as windows, doors, railings, fencing or other site components, and/or detailed building elevations which are proposed for alteration or replacement are recommended and may be required by the city. **Provided**
    c. A clear depiction of the proposed appearance of the property including paint charts, promotional brochures, and/or clear color photographs of replacement architectural components. Scaled or fully dimensioned drawings of proposed components such as windows, doors, railings, fencing or other site components, and/or detailed building elevations which are proposed for alteration or replacement are recommended and may be required by the city. **Provided**
    d. A clear written description of the proposed modification, including a complete listing of proposed components, materials, and colors. **Provided**
    e. A clear written explanation regarding how the proposed alteration will conform to section 78-517(7) with direct reference to each applicable design standard. **Provided**

6. The design standards according to section 78-517(7) are as follows:
    a. *Building Setback*. Where a uniform setback exists, any structural project or renovation shall maintain the alignment of facades along the sidewalk edge to maintain the quality of the streetwall. This also pertains to parking lots and unbuilt areas; the edge of the sidewalk shall be emphasized with some visible barrier such as a decorative wall or plantings so that the setback is recognized. Within a block-face where setbacks are not uniform, the function and design of neighboring buildings shall be taken into account when determining setbacks. Additionally, other restrictions outlined in the zoning ordinance must be given consideration. **The setbacks are not proposed to change from the existing structure however, an accessibility ramp is proposed at the front of the building. The location will need to be confirmed by survey. Any extension beyond the property line would need to be approved by the City.**

    b. *Building Height.* Study the particular block-face within which structural projects or renovations are contemplated: if buildings are basically the same height, maintain the alignment of building cornices or rooflines to maintain the quality of the streetwall. If height varies occasionally, the height of structural projects shall fall within a range of

10% of the mean building height found within the block-face. In areas where there is more variation in building type and height, the height of structural projects shall be within the range of heights found within the block-face. Corner buildings present special characteristics as they are often larger or more imposing than buildings in the center of a block-face. For structural projects or renovations on corners, building height shall be at least as tall as the next tallest building on the block-face and be similar to that of the tallest building on the adjoining corners. See Figure 1 in chapter 78. **N/A**

c. *Building Width.* The regular, 20-25 foot interval in the Main Street commercial district creates a strong visual rhythm as one walks or drives down Main Street. It is important that this rhythm be retained in these densely-built areas; structural projects shall respect the width of existing buildings by designing a rhythmic division of the facade to repeat this existing rhythm. Structural projects and renovations must take into consideration context within the block-face and maintain the continuity of the block-face. Structural projects within a block-face that is made up of a continuous wall of building fronts (such as that shown in Figure 1) shall maintain the existing building wall by filling the lot from side lot line to side lot line. **The 22-foot building width will remain the same.**

d. *Horizontal Bands.* Wherever possible, existing horizontal bands (such as storefront cornice or lintel and transom windows) shall be retained and uncovered; owners shall move or remove large signs that may cover the banding to allow the horizontal elements to be expressed. When horizontal rhythms are found, horizontal elements that also exist in buildings to either side of the subject building shall be retained. Existing transom windows shall not be filled with brick, wood or other materials. If original building design called for transom windows that are now missing, they shall be visually recreated. If the storefront cornice or lintel is missing, a horizontal division shall be achieved by replacing or simulating the cornice and/or incorporating it in the sign board. **The existing storefront is not changing except the accessibility ramp and handrails.**

e. *Building Proportion.* On a block-by-block basis, the proportions of all buildings shall reflect the building proportions characteristic to that block-face. **No changes planned.**

f. *Vertical Rhythms.* Wherever possible, the floor heights on main facades shall appear visually in proportion to those of adjoining buildings. The rhythm of the ground floor shall harmonize with the rhythm of upper floors. The vertical pattern of exterior building elements formed by *patterns* of building openings for windows and doors, and related elements such as sills, headers, transoms, cornices and sign bands shall be compatible in design and elevation with those of existing buildings in the immediate area. Front and secondary doorways/entries, porches and steps present at the time the building was originally constructed shall be retained; except as required to meet accessibility standards. Non-commercial style doors such as solid doors, half-glazed doors, "colonial style" doors, and highly decorative doors are not permitted in commercial applications. Storm doors are prohibited because they make access difficult.

Window features, including lintels, sills, architraves, shutters, cornice/pediments, hoods and hardware, shall be maintained where possible, or replaced with visually matching

features and materials. Replicating missing window features (such as hoods) in sheet metal, fiberglass, or wood shall be permitted. If window features cannot be replaced or replicated, at least the shape of the window opening shall be retained and expressed. Frames for new windows shall be divided to match original window divisions or shall be based on divisions typical to that building type. Within block-faces where windows are consistently proportioned, structural projects shall maintain this proportion and spacing of windows.
No changes planned.

g. *Rhythm/Relationship of Solids and Voids.* The majority of the front wall surface of the first floor shall be window area. Large storefront windows shall be maintained; do not block up the storefront to install smaller windows. Storefront spandrels shall be as low as possible; do not make the spandrel higher than originally designed and as a result infill the window opening. Spandrel design shall relate to the architectural style of the building; a brick spandrel shall match the masonry of the building and a wood spandrel shall include stiles and rails at the top, bottom and sides. Existing columns shall be left intact and included in the overall design of framing for the shopfront.

Maintain the rhythm of solids and voids in upper stories; the surface of the upper floors shall bear a repeated solid-void relationship, with windows spaced evenly in the wall. Do not change the size of windows or cover over the upper facade. Windows, including transom windows, shall not be painted or filled with brick, wood or other materials. Where old sash will be replaced with new sash, replacement shall be made with sash of the same size and appearance rather than blocking part of the window opening and therefore changing its proportion.
No changes planned.

h. *Roof Forms.* Cornices and parapets shall be maintained. If cornice and/or parapet is missing or damaged, it shall be recreated or repaired in matching wood, metal or brick, or in alternate visually matching materials like fiberglass. Residential-type gabled roofs are prohibited in favor of a sloped roof hidden from view on the front facade by a parapet. Decoration of the roofline by use of special materials or decorative details shall use examples of other buildings in the district as a guide. Mansards or other exotic roof shapes are prohibited; roof shapes not characteristic of buildings in the district are prohibited.

For renovations, roof shape and character of visible materials shall be retained if in keeping with the building's original design including architectural features which give the roof its essential character such as dormer windows, cupolas, cornices, brackets, chimneys and weathervanes.
No changes planned.

i. *Exterior Materials.* In any renovation work, preserving the downtown quality and character shall be given the highest priority. Therefore, to protect the distinctive quality and character of an existing building, any new materials used shall match as closely as possible either the existing materials or the materials used at the time the building was originally constructed. When the cost or availability of materials that match original materials make their use prohibitive, and when alternate materials can visually match original materials, the use of alternate materials shall be permitted. The uniform identity created by the repeated use of masonry as the primary building material is very important to retain. As a rule, new buildings shall be constructed with street-facing facades of brick or stone. If the majority of street-facing facades within the block-face are constructed with siding (see below), then siding shall be permitted. On a site-specific basis, the trim materials of existing buildings to either side of the building being designed shall be reflected in the design. In addition:

1. *Masonry.* Stone or brick facing shall be of even coloration and consistent size. Cinder block, concrete block, concrete slab, or concrete panel shall not be permitted on street-facing facades.

2. *Siding.* Wood or thin board textured vinyl or textured metal clapboard siding may be appropriate, particularly if the proposed non-masonry exterior was originally used on the building. In certain instances, clapboard or board and batten may be in keeping with the general design theme. Asphalt shingle siding, rough-sawn shake siding or diagonal wood siding shall not be permitted.

3. EIFS. Exterior Insulation and Finish Systems (EIFS) such as Dryvit shall not be permitted. Stucco shall not be permitted for structural projects and shall only be permitted for renovations if used at the time the building was originally constructed.

4. *Glazing (glass).* Clear, or slightly tinted glass or related glazing material shall be used. Mirrored glass, smoked glass, or heavily tinted glass shall not be permitted.

   To be reviewed by the Plan Commission.

j. *Exterior Surfaces.* Appurtenances (accessories): Exterior surface appurtenances shall be compatible with those of existing buildings in the immediate area. In addition:

1. Traditional storefront design (characterized by strong horizontal and vertical rhythms formed by building openings, storefront columns, storefront cornices, upper cornices, kickplates, signbands, large display windows, and transom windows) shall be employed for all buildings.

2. Throughout the district, cluttering street-facing facades with unnecessary signs, brackets, wiring, meter boxes, antennae, gutters, downspouts and other appurtenances is prohibited. Where necessary, such features shall be colored so as to blend in, rather than contrast, with the immediately adjacent building exterior. Extraneous ornamentation which is inconsistent with buildings within the immediate area is also prohibited.

   To be reviewed by the Plan Commission.

k. *Awnings*. Awnings shall fit within the storefront space, shall not cover the side piers, or be installed above the lintel of the storefront and shall be made of durable weather-resistant canvas or vinyl fabric. The color of awnings shall complement facade colors; solid colors or stripes shall be permitted. Awnings shall project no more than 7 feet from the front wall. Awnings with a curved profile and backlit awnings are prohibited. Permanent sloped canopies of aluminum, shakes or shingles shall not be permitted. Awnings shall be a minimum of 9 feet from grade. **No changes planned.**

l. *Exterior Colors*. Colors shall relate in a positive way to the existing materials found on the façade (especially the masonry), and to existing elements, such as signs or awnings. Clean the exterior surfaces with the gentlest means possible, such as light washing with light pressure (sandblasting destroys the brick by prematurely weathering and eroding its surface). When the surface to be painted has a quantity of three-dimensional detail, use light or mid-range color values, rather than extremely dark colors, so the details are not hidden. When in doubt on an appropriate palette, use shades of one color with one highlight color. When choosing colors, take into account the position of the building in relation to sunlight. Exterior colors for structures and appurtenances including fixtures and signs shall be compatible and harmonious with those of existing buildings in the immediate area. Specifically, throughout the district:

1. High gloss paints, lacquers, varnishes or other "shiny" non-glazing surfaces shall not be used.

2. Façade color combination schemes shall be limited to no more than three different colors for each structure on a property. (Varying shades, tints or intensities of a color shall count as a different color for this purpose.)

3. Façade color schemes shall be used consistently throughout the property, including on both the upper and lower portions of buildings, and on all facades of a building or structure. **To be reviewed by the Plan Commission.**

m. *Exterior Lighting*. Throughout the district, on-site exterior lighting shall be compatible and harmonious with existing lighting in the immediate area. Specifically:

1. *Pedestrian lighting:* The design, color, height, location and light quality of on-site pedestrian lighting shall be consistent with existing pedestrian lighting fixtures.

2. Additional lighting standards are found in section 78-707.
The lighting cannot be more than 0.5 foot-candles at the property line and the lighting element cannot be seen from a residential property.

n. *Signage*. Signs shall be placed at the top of the storefront; painted on the window itself; hanging over the sidewalk; or on the edge of an awning.

1. Coordinate the placement of signage with adjacent storefronts to avoid visual confusion. Large hanging plastic signs and oversized signs are prohibited.

2. Signage placed over features on the second story facade are prohibited.

3. Select clear, simple lettering styles for easy readability.

4. Consider the color of the building and of neighboring buildings when determining sign color.

5. Select sign colors that provide contrast between letters and background: a dark background with lighter colored letters is most easily perceived by the human eye.

6. Where possible, signs shall reflect an individual business message rather than advertise a nationally-franchised product.

7. There are additional signage requirements in Article VIII.
   No new signage proposed

7. Building permits are necessary prior to any interior or exterior work.

If you have any questions, please contact me at 608-646-0421

Sincerely,

City of Stoughton

Michael P. Stacey

Michael P. Stacey
Zoning Administrator